THE BREAK SPORTS GRILL REMODEL

11274 Kestrel Rise RD.
South Jordan, Utah 84095

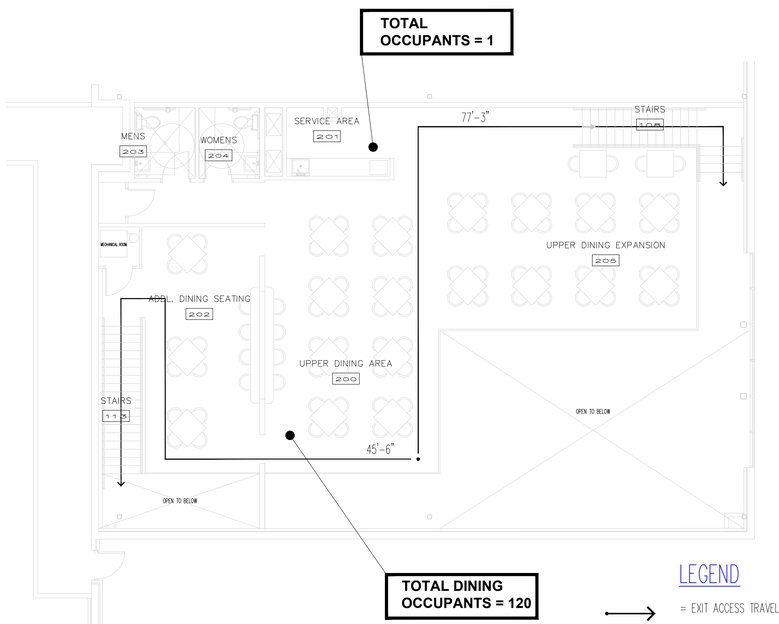

LEGEND

= EXIT ACCESS TRAVEL

UPPER LEVEL EXITING & EGRESS PLAN — 2

NORTH

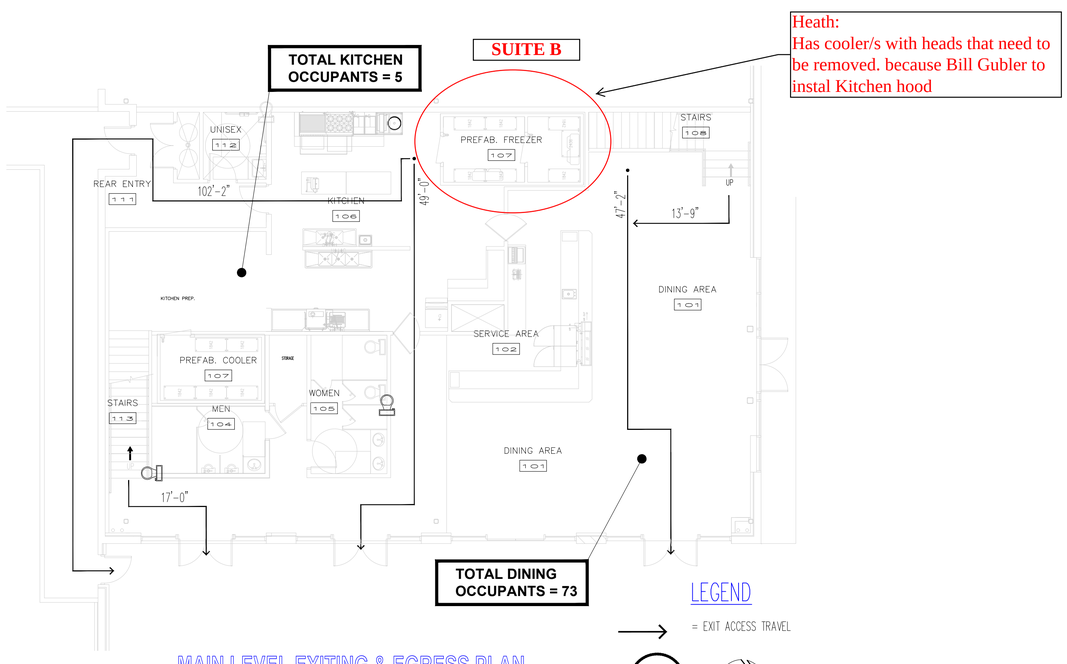

Heath:
Has cooler/s with heads that need to be removed. because Bill Gubler to instal Kitchen hood

LEGEND

= EXIT ACCESS TRAVEL

MAIN LEVEL EXITING & EGRESS PLAN — 1

SCALE: 1/4" = 1'-0"

NORTH

WALL TYPES

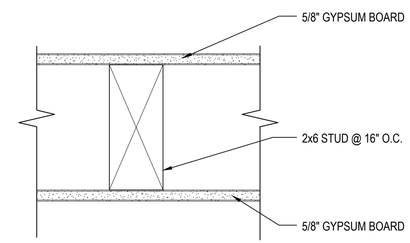

WALL TYPE — B

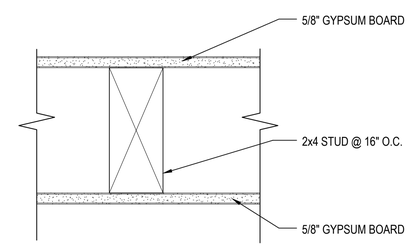

WALL TYPE — A

PROJECT DATA

Project Name: The Break Sports Grill Remodel

Project Address: 11274 Kestrel Rise RD.
South Jordan, Utah 84095

Project Description:
1. Add additional dining space on 2nd level
2. Add additional exhaust hood to kitchen
3. Expand current restrooms.

Building occupancy: A-2

Building Type: III-B (fully sprinkled)

Dining area occupant loads:
Main level: 1,368 SF x 15/sf = 92 occupants
Upper level: 1,933 SF x 15/sf = 129 occupants

Maximum travel distances:
Main level dining: 48 LF
Upper level dining: 131 LF
Kitchen: 102 LF

Note:
Upper level accessible route not required per IBC 1104.4

DRAWING INDEX

G0.0	COVER SHEET (THIS SHEET)
AD1.0	DEMO PLANS
A1.0	1ST FLOOR PLAN
A2.0	2ND FLOOR PLAN
A3.0	ENLARGED RESTROOM PLAN
A3.1	ENLARGED KITCHEN PLAN
A4.0	SECTIONS & DETAILS
A4.1	DETAILS
A5.0	FOOTING & FRAMING PLANS
A6.0	RESTROOM ELEVATIONS
E1.0	ELECTRICAL PLANS
FP1.0	FIRE PROTECTION PLAN

Summerwood Builders, Inc.
Phone:801-520-6067
tony@summerwoodbuilders.com
summerwoodbuilders.com

STATE OF UTAH — DAVID S. RICHARDSON — 134822 — STRUCTURAL ENGINEER

STATE OF UTAH — DAVID S. RICHARDSON — 134822 — LICENSED ARCHITECT

STAMPS

Summerwood Builders, Inc.
DESIGN-BUILD CONTRACTORS

Structural Engineer:

No.	Description	Date
1	PLAN REVIEW COMMENTS	7/15/20

THE BREAK SPORTS GRILL REMODEL

COVER SHEET

Project number	20-002
Date	04/02/20
Drawn by	TW
Checked by	TW

G0.0

Scale NOTED

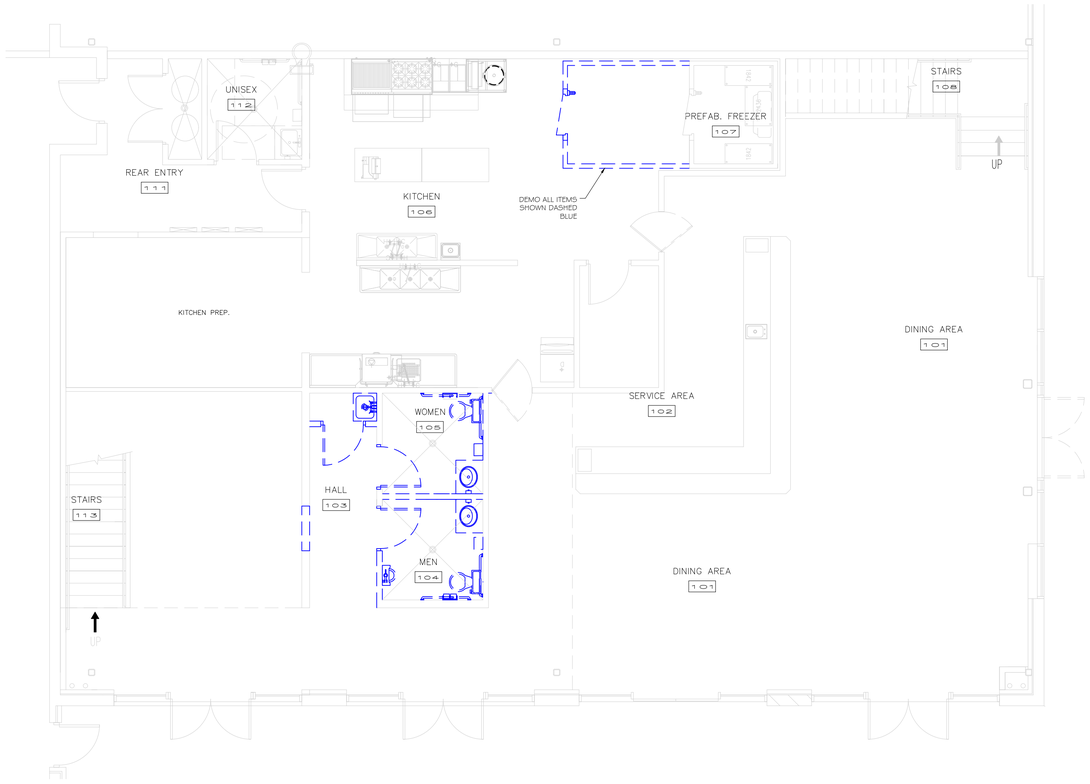

MAIN LEVEL DEMO PLAN

SCALE: 3/16" = 1'-0"

1

NORTH

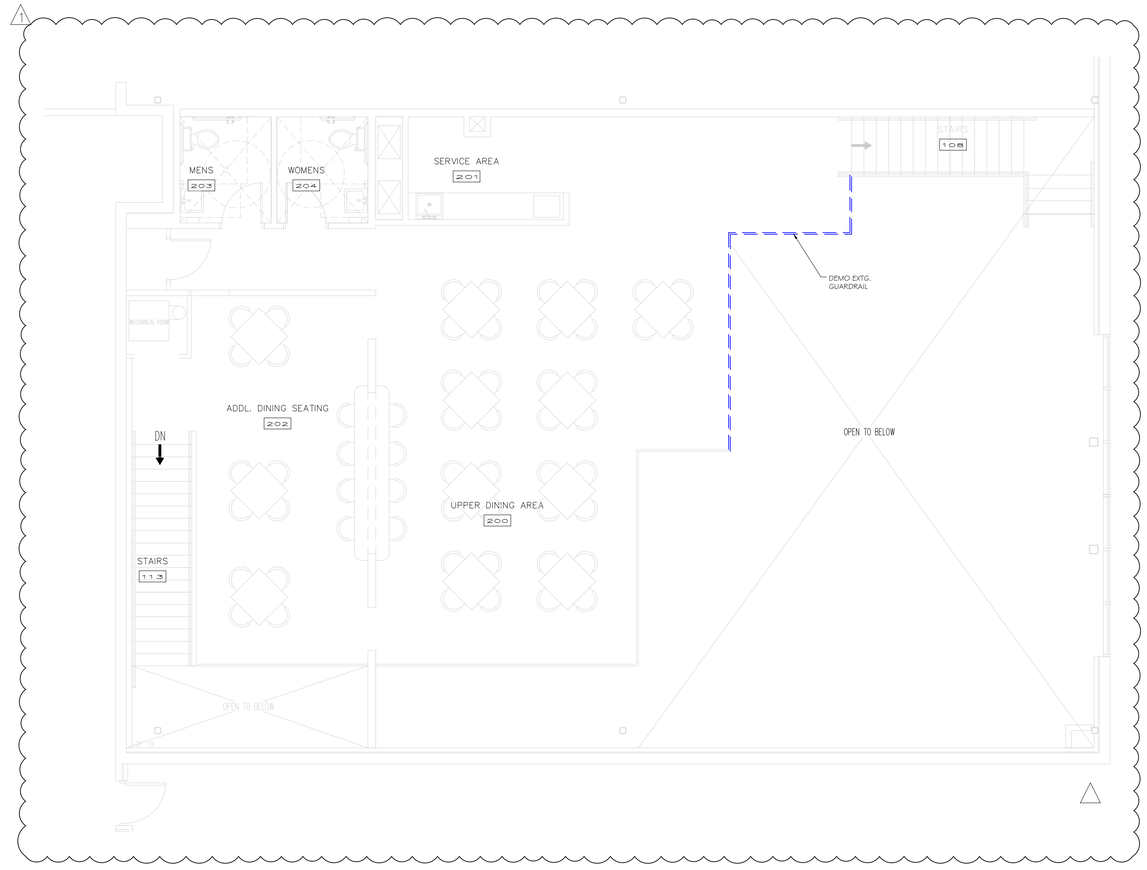

UPPER LEVEL DEMO PLAN

SCALE: 3/16" = 1'-0"

2

NORTH

Summerwood Builders, Inc.
Phone:801-520-6067
tony@summerwoodbuilders.com
summerwoodbuilders.com

STATE OF UTAH
DAVID S. RICHARDSON
134822
LICENSED ARCHITECT

STAMPS

Summerwood Builders, Inc.
DESIGN-BUILD CONTRACTORS

Structural Engineer:

No.	Description	Date
1	PLAN REVIEW COMMENTS	7/15/20

THE BREAK SPORTS GRILL REMODEL

DEMO PLANS

Project number	20-002
Date	04/02/20
Drawn by	TW
Checked by	TW

AD1.0

Scale	NOTED

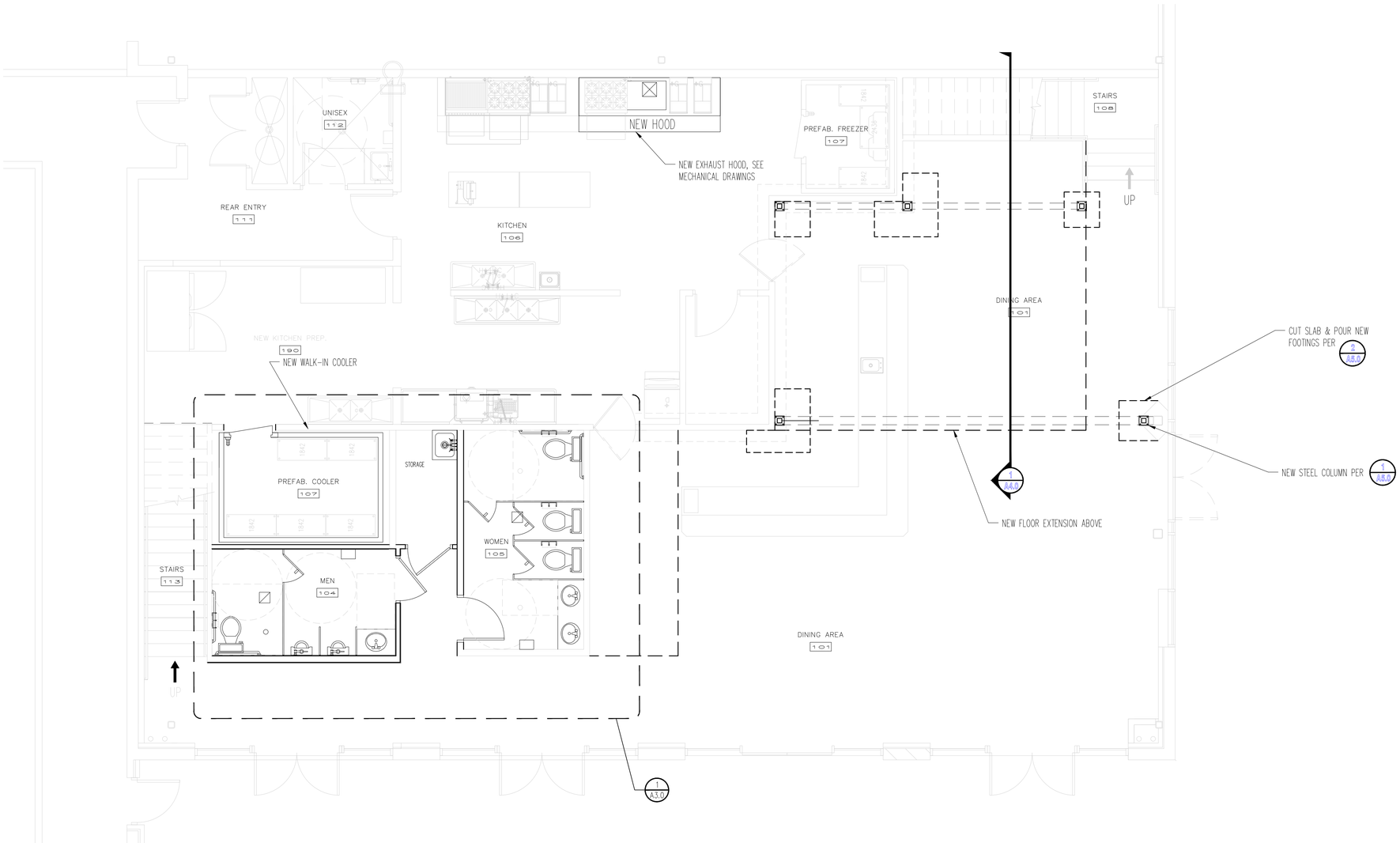

MAIN LEVEL FLOOR PLAN

SCALE: 1/4" = 1'-0"

1

NORTH

Sumerwood Builders, Inc.
Phone:801-520-6067
tony@summerwoodbuilders.com
summerwoodbuilders.com

STATE OF UTAH
DAVID S. RICHARDSON
134822
LICENSED ARCHITECT

STAMPS

Summerwood Builders, Inc.
DESIGN-BUILD CONTRACTORS

Structural Engineer:

No.	Description	Date
1	PLAN REVIEW COMMENTS	7/15/20

THE BREAK SPORTS GRILL REMODEL

1ST FLOOR PLAN

Project number	20-002
Date	04/02/20
Drawn by	TW
Checked by	TW

A1.0

Scale	NOTED

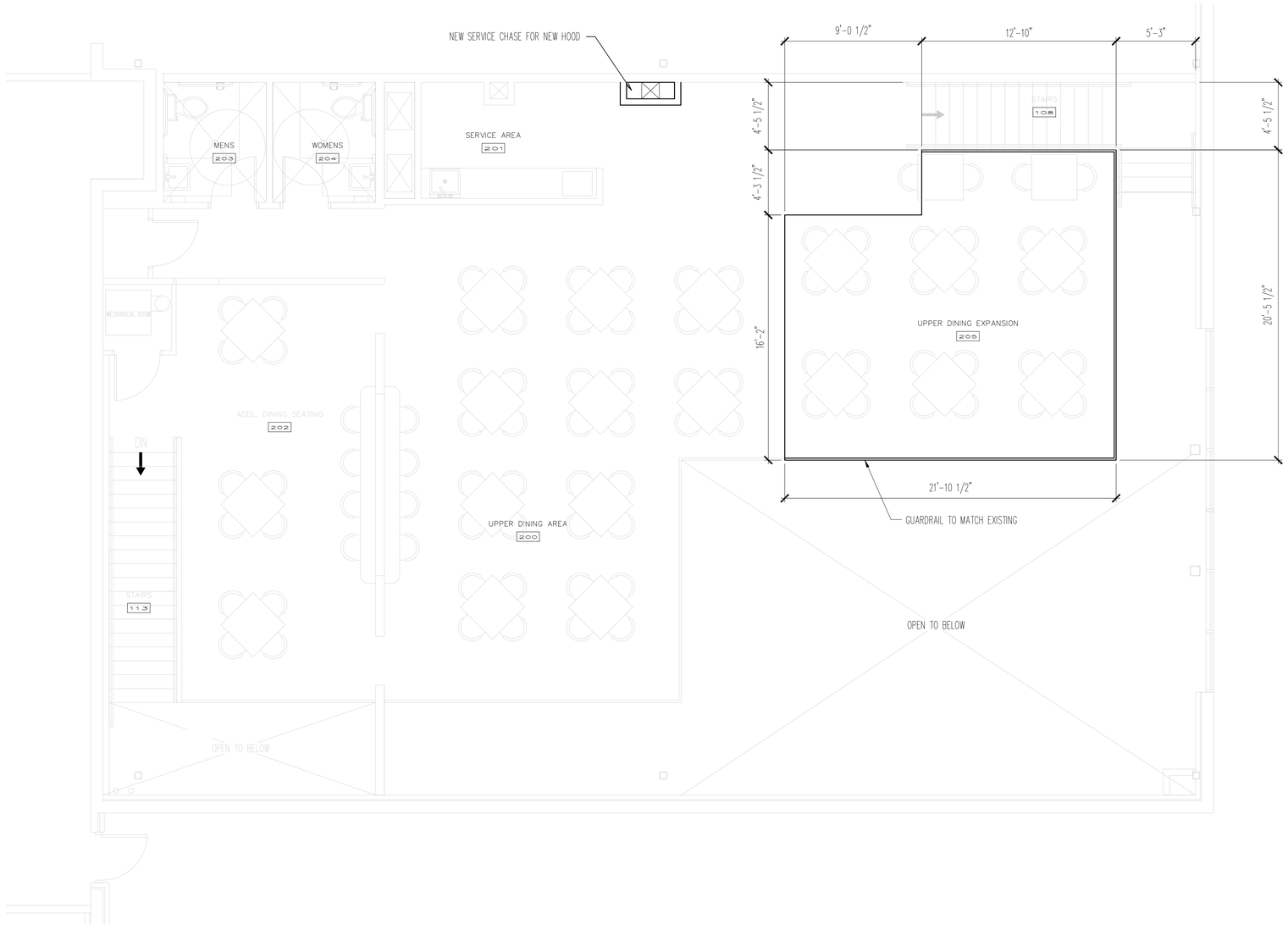

UPPER LEVEL FLOOR PLAN

SCALE: 1/4" = 1'-0"

1

NORTH

Summerwood Builders, Inc.
Phone:801-520-6067
tony@summerwoodbuilders.com
summerwoodbuilders.com

STATE OF UTAH
DAVID S. RICHARDSON
134822
LICENSED ARCHITECT

STAMPS

Summerwood Builders, Inc.
DESIGN-BUILD CONTRACTORS

Structural Engineer:

No.	Description	Date
1	PLAN REVIEW COMMENTS	7/15/20

THE BREAK SPORTS GRILL REMODEL

2ND FLOOR PLAN

Project number	20-002
Date	04/02/20
Drawn by	TW
Checked by	TW

A2.0

Scale	NOTED

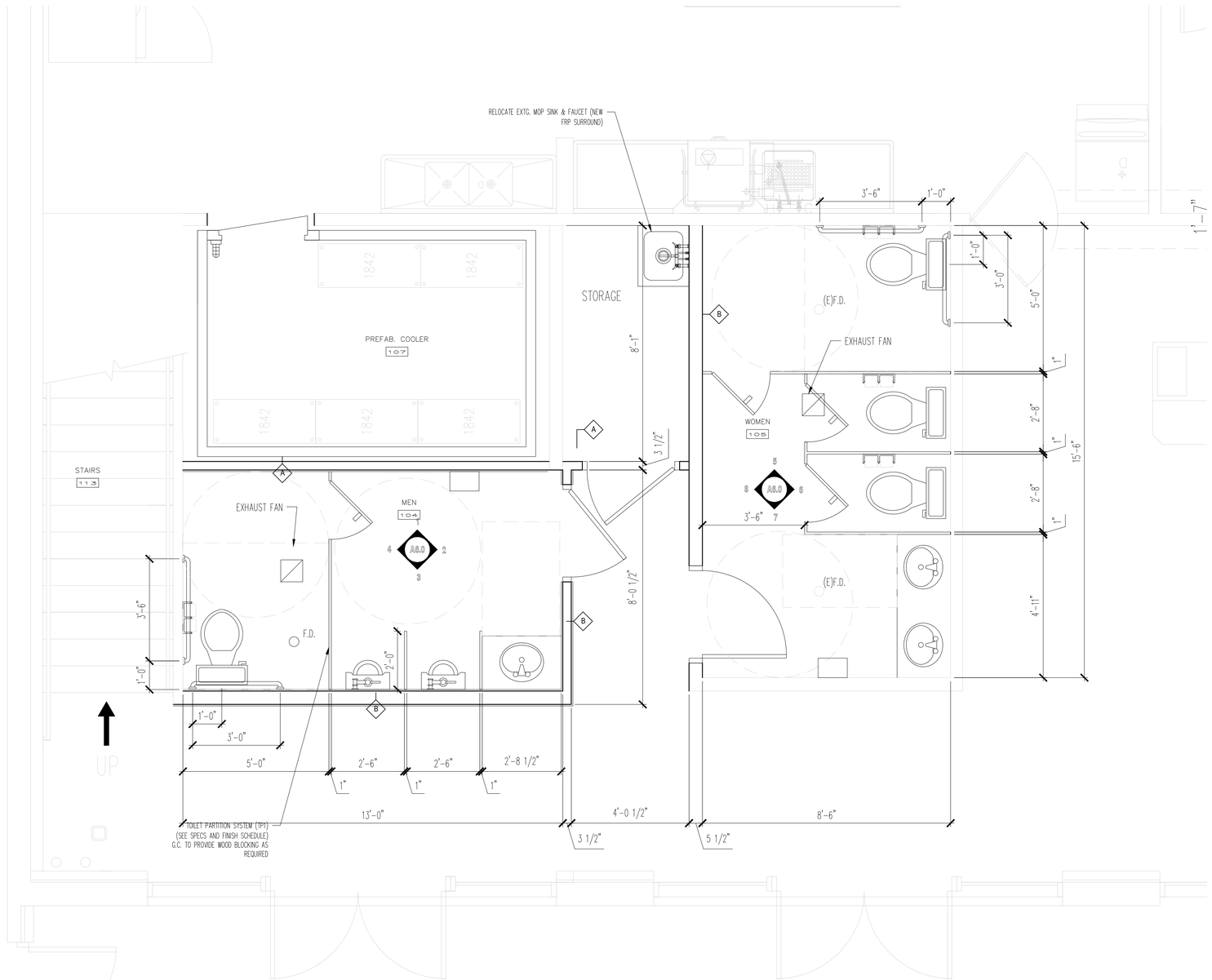

ENLARGED RESTROOM FLOOR PLAN

SCALE: 1/2" = 1'-0"

1

NORTH

Summerwood Builders, Inc.
Phone:801-520-6067
tony@summerwoodbuilders.com
summerwoodbuilders.com

STATE OF UTAH
DAVID S. RICHARDSON
134822
LICENSED ARCHITECT

STAMPS

Summerwood Builders, Inc.
DESIGN-BUILD CONTRACTORS

Structural Engineer:

No.	Description	Date
1	PLAN REVIEW COMMENTS	7/15/20

THE BREAK SPORTS GRILL REMODEL

ENLARGED RESTROOM PLAN

Project number	20-002
Date	04/02/20
Drawn by	TW
Checked by	TW

A3.0

Scale NOTED

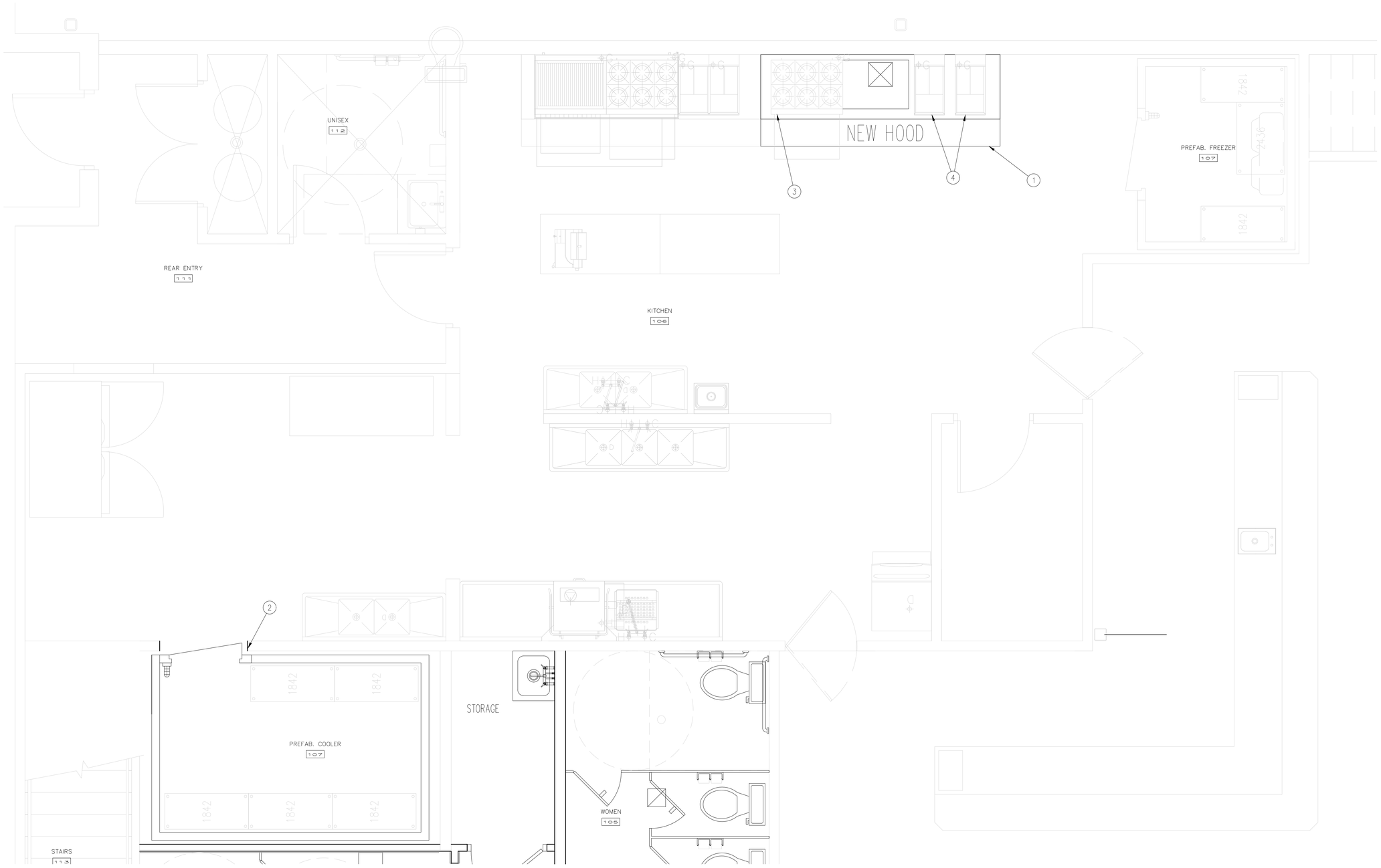

ENLARGED KITCHEN PLAN

SCALE: 1/2" = 1'-0"

1

NORTH

KITCHEN FINISH SCHEDULE		
ROOM	SURFACE	FINISH
KITCHEN	FLOOR	EPOXY PAINTED CONCRETE ON GRADE
KITCHEN	WALL	FIBER REINFORCED PLASTIC W/ RUBBER COVE BASE
KITCHEN	WALL BEHIND COOKING APPLIANCES	20 GA. STAINLESS STEEL
KITCHEN	CEILING	T-BAR CEILING W/ FIRE RATED FRP BLANK PANELS

EQUIPMENT LIST

1. NEW 9' EXHAUST HOOD
2. SELF CONTAINED WALK-IN COOLER
3. 60" RANGE W/ FLAT TOP GRIDDLE
4. GAS FLOOR FRYER

Summerwood Builders, Inc.
Phone:801-520-6067
tony@summerwoodbuilders.com
summerwoodbuilders.com

STATE OF UTAH
DAVID S. RICHARDSON
134822
LICENSED ARCHITECT

STAMPS

Summerwood Builders, Inc.
DESIGN-BUILD CONTRACTORS

Structural Engineer:

No.	Description	Date
1	PLAN REVIEW COMMENTS	7/15/20

THE BREAK SPORTS GRILL REMODEL

ENLARGED KITCHEN PLAN

Project number	20-002
Date	04/02/20
Drawn by	TW
Checked by	TW

A3.1

Scale NOTED

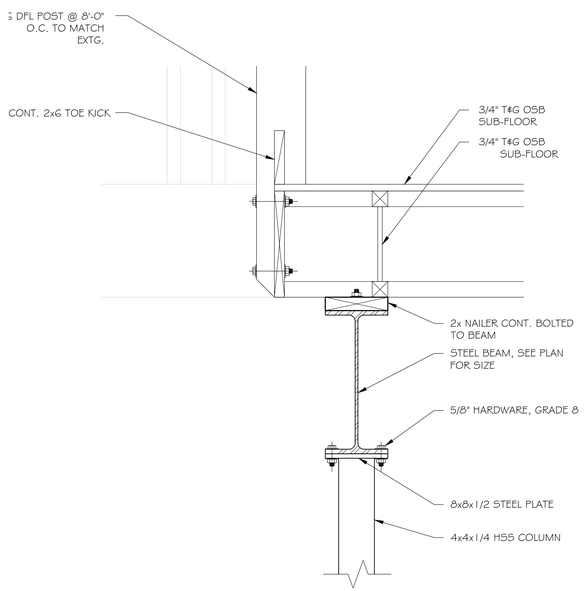

FLOOR FRAMING / BEAM CONNECTION

2

SCALE: 1-1/2" = 1'-0"

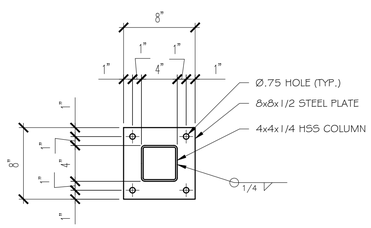

SECTION A-A

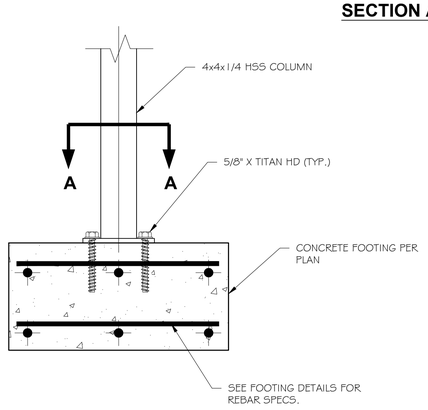

COLUMN CONNECTION DETAIL

3

SCALE: 1-1/2" = 1'-0"

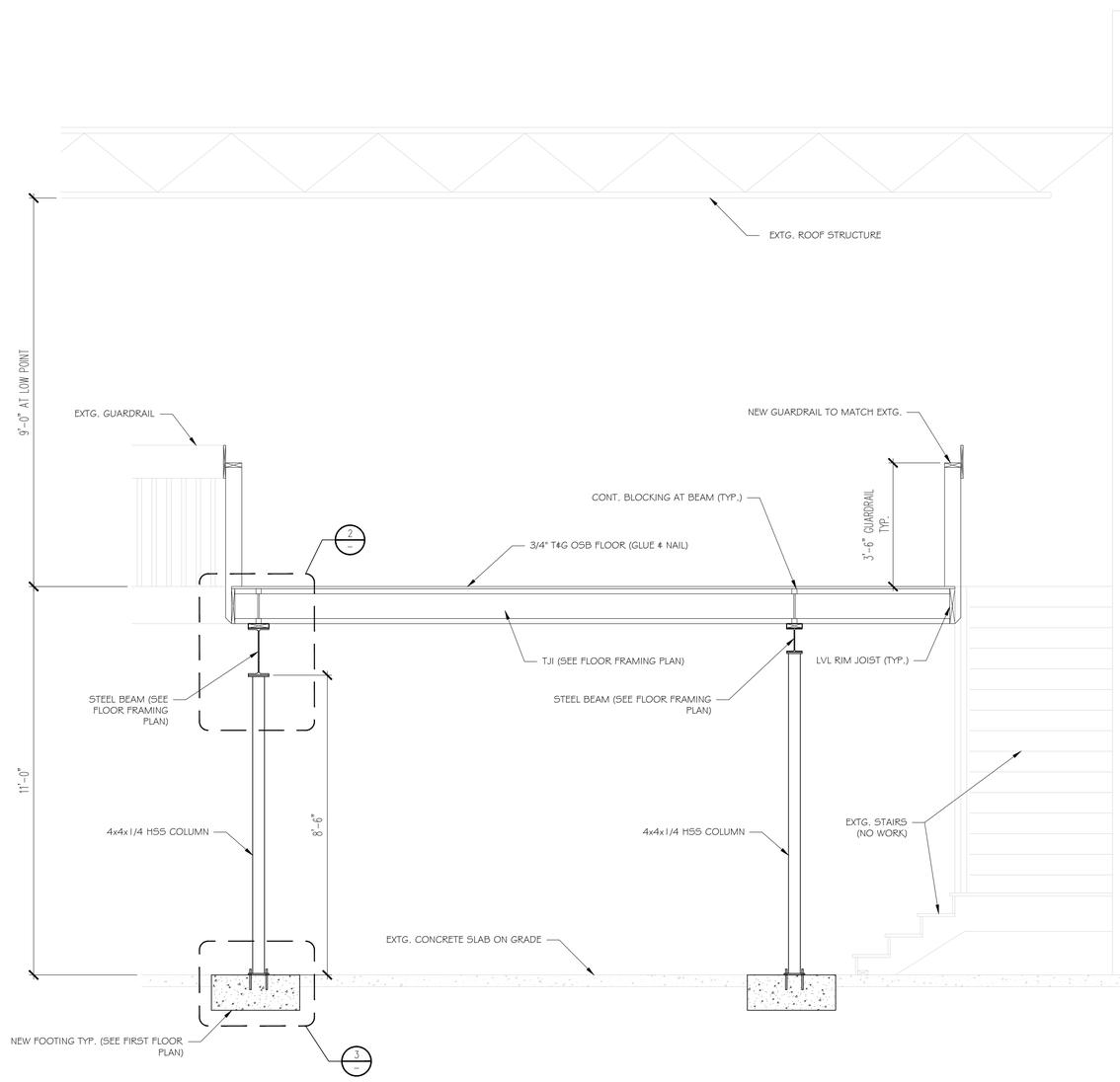

SECTION THROUGH UPSTAIRS EXPANSION

1

SCALE: 1/2" = 1'-0"

Sumerwood Builders, Inc.
Phone:801-520-6067
tony@summerwoodbuilders.com
summerwoodbuilders.com

STATE OF UTAH
DAVID S. RICHARDSON
10M 134822
STRUCTURAL ENGINEER

STATE OF UTAH
DAVID S. RICHARDSON
134822
LICENSED ARCHITECT

STAMPS

Sumerwood Builders, Inc.
DESIGN-BUILD CONTRACTORS

Structural Engineer:

No.	Description	Date
1	PLAN REVIEW COMMENTS	7/15/20

THE BREAK SPORTS GRILL REMODEL

SECTIONS & DETAILS

Project number	20-002
Date	04/02/20
Drawn by	TW
Checked by	TW

A4.0

Scale NOTED

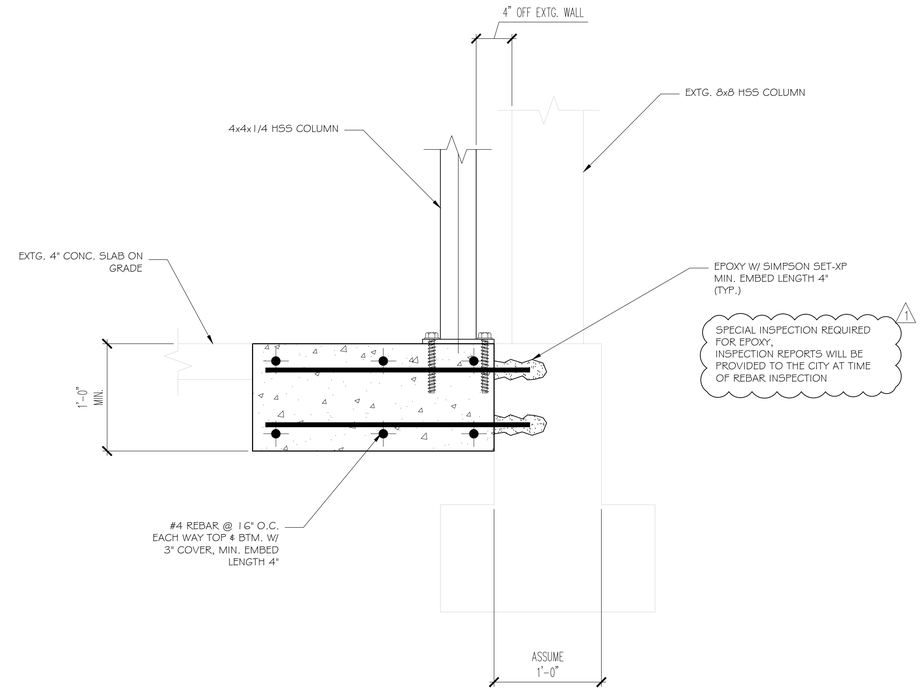

FOUNDATION DETAIL AT EXTERIOR WALL

SCALE: 1-1/2" = 1'-0"

2

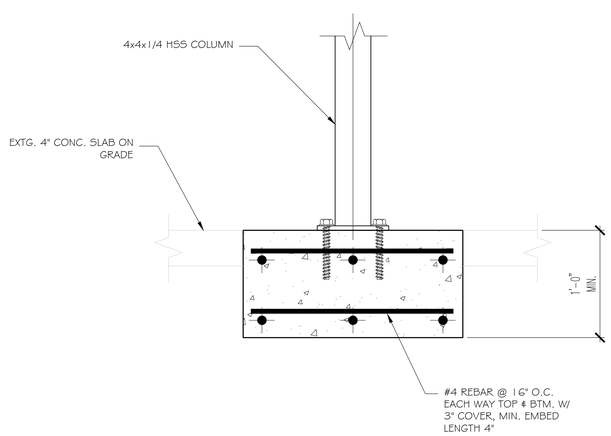

FOUNDATION DETAIL AT STAIRS

SCALE: 1-1/2" = 1'-0"

3

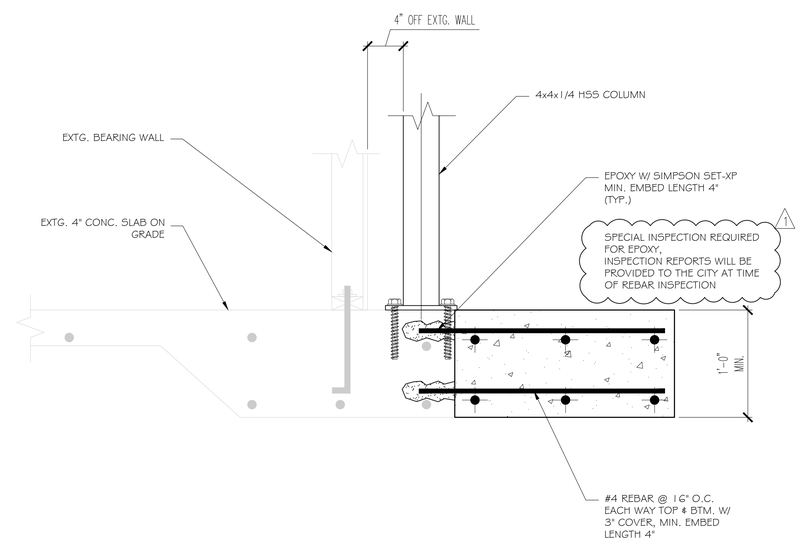

FOUNDATION DETAIL AT INTERIOR WALL

SCALE: 1-1/2" = 1'-0"

1

Summerwood Builders, Inc.
Phone:801-520-6067
tony@summerwoodbuilders.com
summerwoodbuilders.com

STATE OF UTAH
DAVID S. RICHARDSON
134822
STRUCTURAL ENGINEER

STATE OF UTAH
DAVID S. RICHARDSON
134822
LICENSED ARCHITECT

STAMPS

Summerwood Builders, Inc.
DESIGN-BUILD CONTRACTORS

Structural Engineer:

No.	Description	Date
1	PLAN REVIEW COMMENTS	7/15/20

THE BREAK SPORTS GRILL REMODEL

DETAILS

Project number	20-002
Date	04/02/20
Drawn by	TW
Checked by	TW

A4.1

Scale NOTED

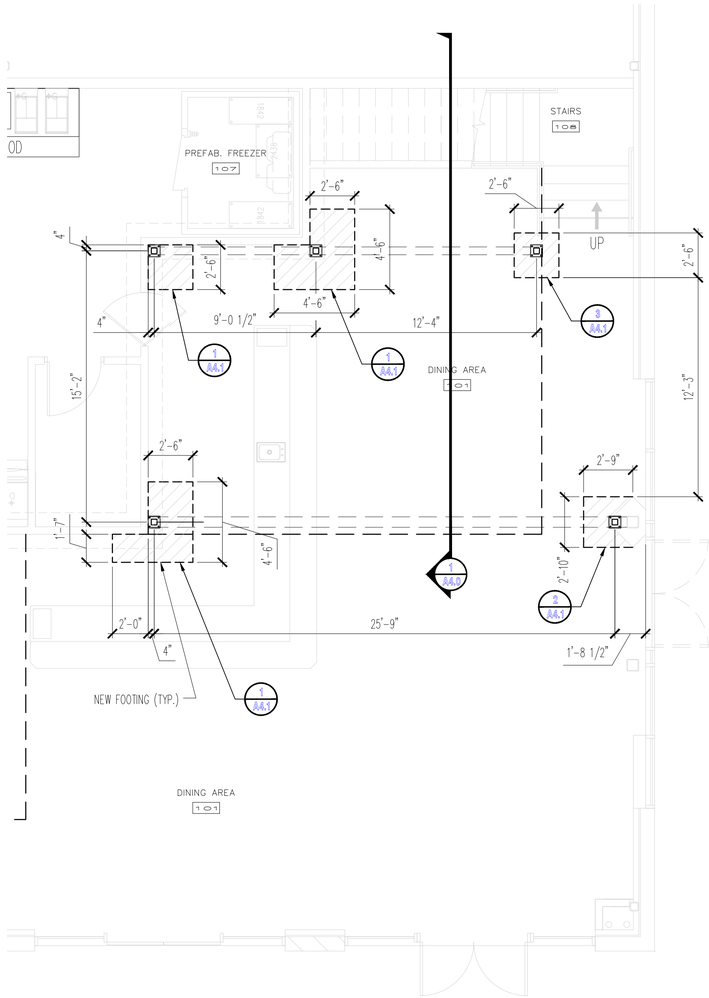

FOOTING PLAN

SCALE: 1/4" = 1'-0"

2

NORTH

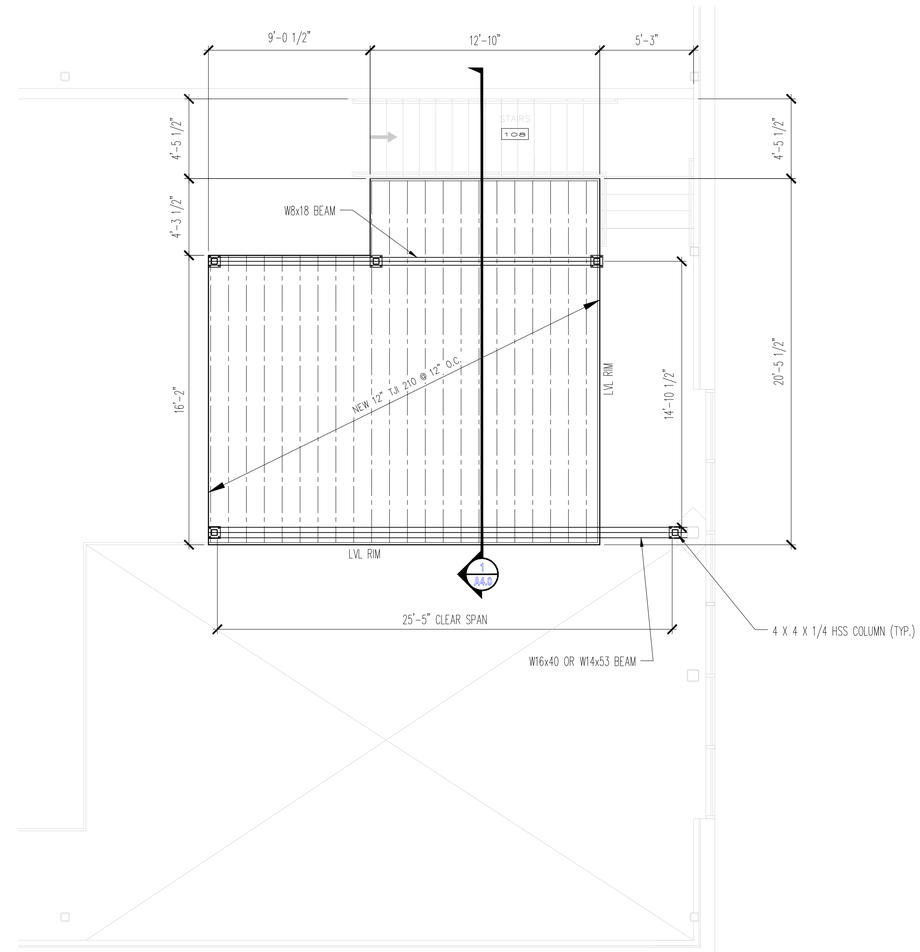

UPPER LEVEL FLOOR FRAMING PLAN

SCALE: 1/4" = 1'-0"

1

NORTH

Summerwood Builders, Inc.
Phone:801-520-6067
tony@summerwoodbuilders.com
summerwoodbuilders.com

STATE OF UTAH
DAVID S. RICHARDSON
LICENSE NO. 134822
STRUCTURAL ENGINEER

STATE OF UTAH
DAVID S. RICHARDSON
134822
LICENSED ARCHITECT

STAMPS

Summerwood Builders, Inc.
DESIGN-BUILD CONTRACTORS

Structural Engineer:

No.	Description	Date
1	PLAN REVIEW COMMENTS	7/15/20

THE BREAK SPORTS GRILL REMODEL

FOOTING & FRAMING PLANS

Project number	20-002
Date	04/02/20
Drawn by	TW
Checked by	TW

A5.0

Scale	NOTED

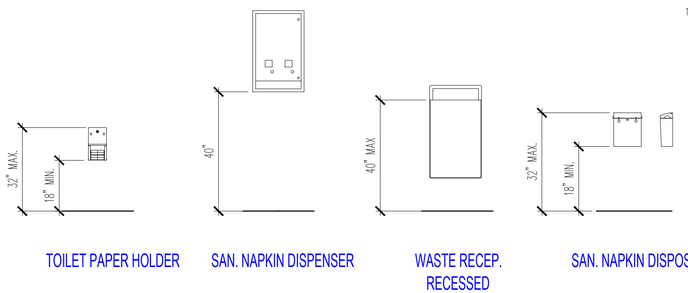

TYPICAL MOUNTING HEIGHTS — 9

SCALE: 1/2" = 1'

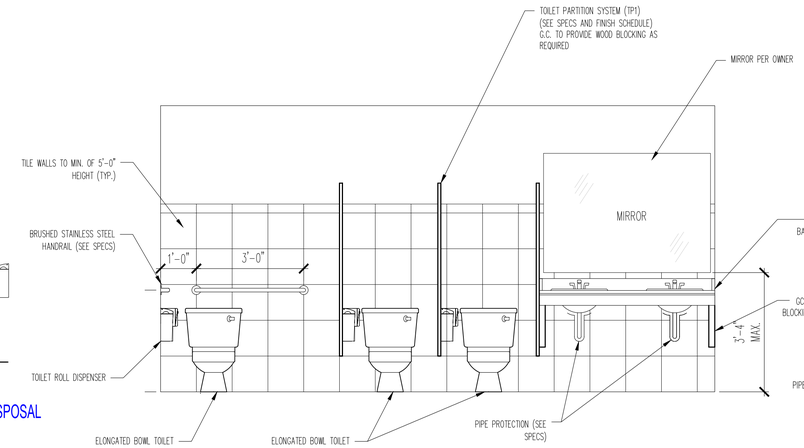

NORTH WALL WOMEN'S RESTROOM — 6

SCALE: 1/2" = 1'-0"

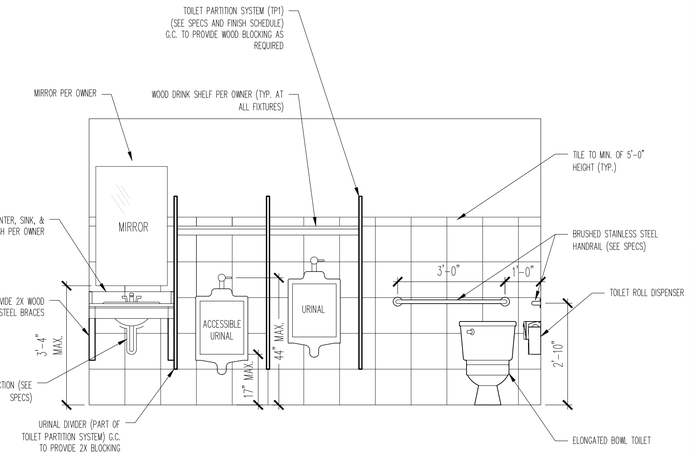

EAST WALL MEN'S RESTROOM — 3

SCALE: 1/2" = 1'-0"

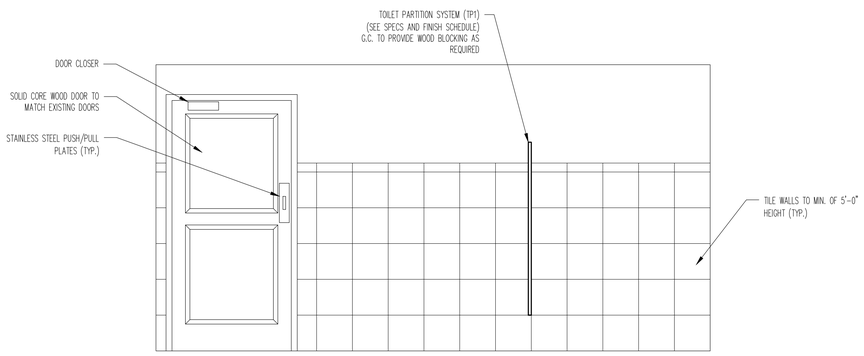

SOUTH WALL WOMEN'S RESTROOM — 8

SCALE: 1/2" = 1'-0"

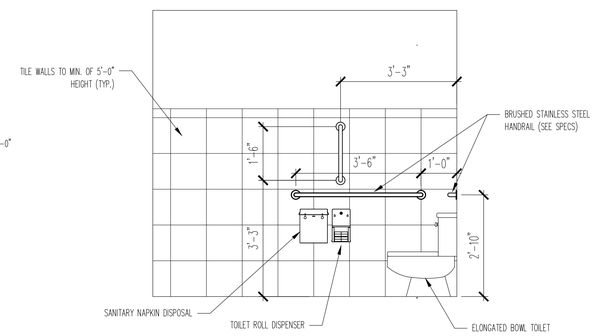

WEST WALL WOMEN'S RESTROOM — 5

SCALE: 1/2" = 1'-0"

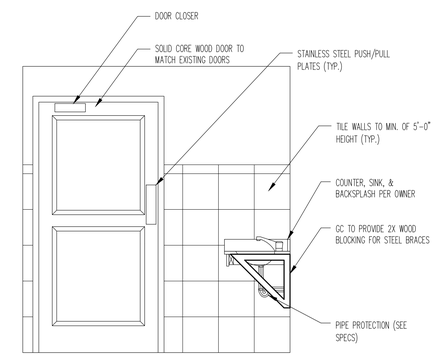

NORTH WALL MEN'S RESTROOM — 2

SCALE: 1/2" = 1'-0"

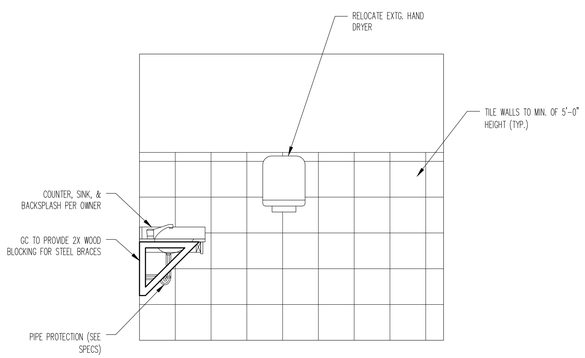

EAST WALL WOMEN'S RESTROOM — 7

SCALE: 1/2" = 1'-0"

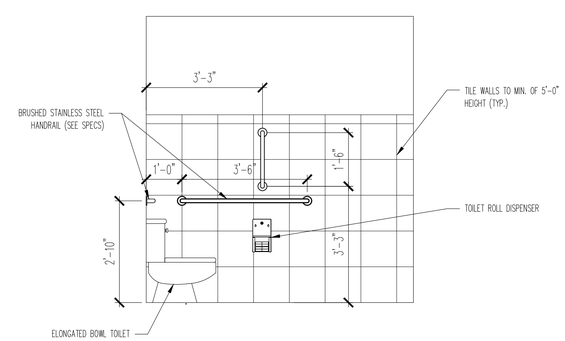

SOUTH WALL MEN'S RESTROOM — 4

SCALE: 1/2" = 1'-0"

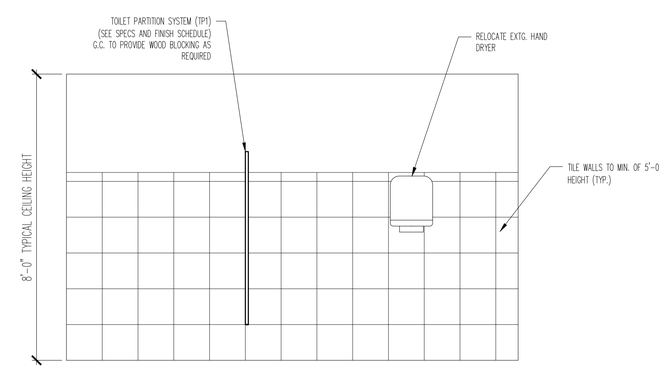

WEST WALL MEN'S RESTROOM — 1

SCALE: 1/2" = 1'-0"

Sumerwood Builders, Inc.
Phone:801-520-6067
tony@summerwoodbuilders.com
summerwoodbuilders.com

STATE OF UTAH
DAVID S. RICHARDSON
134822
LICENSED ARCHITECT

STAMPS

Sumerwood Builders, Inc.
DESIGN-BUILD CONTRACTORS

Structural Engineer:

No.	Description	Date
1	PLAN REVIEW COMMENTS	7/15/20

THE BREAK SPORTS GRILL REMODEL

RESTROOM ELEVATIONS

Project number	20-002
Date	04/02/20
Drawn by	TW
Checked by	TW

A6.0

Scale NOTED

ELECTRICAL SYMBOLS

$	SINGLE POLE SWITCH		TELEPHONE JACK
$3	THREE WAY SWITCH		FLOOR TELEPHONE JACK
$D	DIMMER SWITCH	T	THERMOSTAT
	DUPLEX OUTLET		EXHAUST FAN
GFI	GFCI OUTLET		SURFACE MOUNTED LIGHT
	220V OUTLET	WP	SURFACE MOUNTED LIGHT (WATER-PROOF)
WP	WATER-PROOF OUTLET		WALL MTD. FLOODLIGHTS (MOTION SENS. LOCATIONS PER OWNER)
	QUAD OUTLET		2X4 TROFFER, LED, FOOD SERVICE AREA
	SPLIT OUTLET		18" SURFACE MOUNTED FLOURENCENT LIGHT
J	JUNCTION BOX		RECESSED CAN LIGHT
	FLOOR MOUNTED OUTLET	CO	SMOKE/CARBON MONOXIDE DETECTOR
SD	SMOKE DETECTOR		

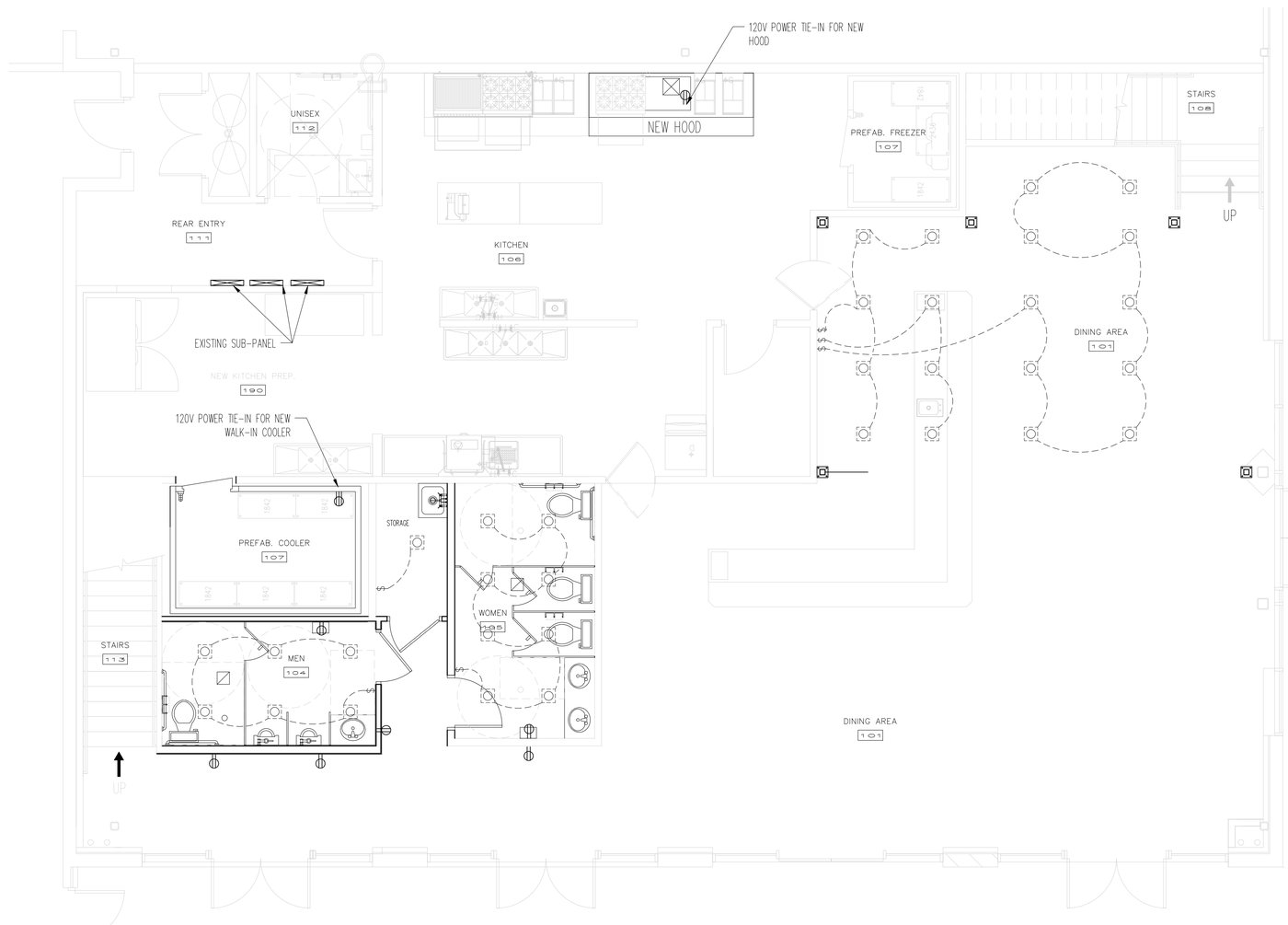

MAIN LEVEL LIGHTING PLAN 1

SCALE: 1/4" = 1'-0"

NORTH

NOTE:
NO ELECTRICAL WORK ON UPPER LEVEL.

Sumerwood Builders, Inc.
Phone:801-520-6067
tony@summerwoodbuilders.com
summerwoodbuilders.com

STAMPS

Sumerwood Builders, Inc.
DESIGN-BUILD CONTRACTORS

Structural Engineer:

No.	Description	Date
1	PLAN REVIEW COMMENTS	7/15/20

THE BREAK SPORTS GRILL REMODEL

NEW ELECTRICAL PLANS

Project number	20-002
Date	04/02/20
Drawn by	TW
Checked by	TW

E1.0

Scale	NOTED

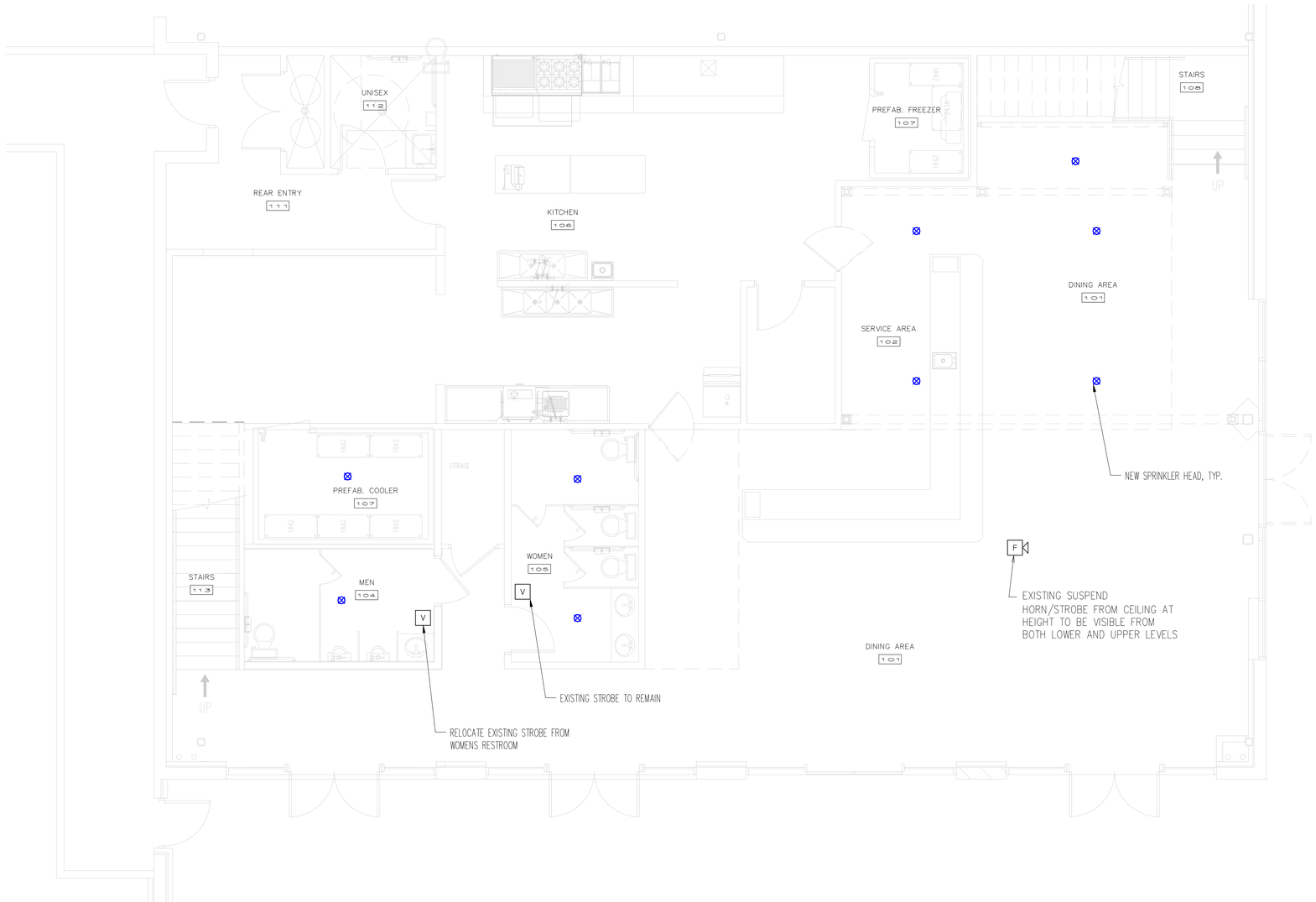

MAIN LEVEL FIRE PROTECTION PLAN

SCALE: 1/4" = 1'-0"

1

NORTH

FIRE PROTECTION SYMBOLS	
F	HORN/STROBE
V	STROBE ONLY
⊗	SPRINKLER HEAD

NOTE: NO WORK ON UPPER LEVEL

Summerwood Builders, Inc.
Phone:801-520-6067
tony@summerwoodbuilders.com
summerwoodbuilders.com

STAMPS

Summerwood Builders, Inc.
DESIGN-BUILD CONTRACTORS

Structural Engineer:

No.	Description	Date
1	PLAN REVIEW COMMENTS	7/15/20

THE BREAK SPORTS GRILL REMODEL

FIRE PROTECTION PLAN

Project number	20-002
Date	04/02/20
Drawn by	TW
Checked by	TW

FP1.0

Scale NOTED