VELOCIRAX TI

850 EAST MILL POND DRIVE LEHI, UTAH

OWNERSHIP

ARCHITECT & STRUCTURAL ENGINEER

aeurbia architects and engineers
909 West South Jordan Parkway
south jordan, utah 84095
phone: 801.746.0456 - fax: 801.575.6456
webpage: aeurbia.com

GENERAL CONTRACTOR

MECHANICAL ENGINEER

DALE R. WILDE CO.
CONSULTING ENGINEERS
428 WINCHESTER SUITE 240
SALT LAKE CITY, UTAH 84107
PHONE 801-433-1125 – EMAIL WILDE@DRWCO.COM

ELECTRICAL ENGINEER

BNA CONSULTING
635 SOUTH STATE STREET
SALT LAKE CITY, UT 84111
PH: (801) 532-2196
WWW.BNACONSULTING.COM

CONTRACTOR COORDINATION NOTES

1. IT IS THE CONTRACTOR'S RESPONSIBILITY TO REVIEW AND COORDINATE THE WORK OF ALL SUB-CONTRACTORS, TRADES AND SUPPLIERS WITH THE REQUIREMENTS OF THE CONTRACT DOCUMENTS BEFORE COMMENCING CONSTRUCTION, AND TO ASSURE THAT ALL PARTIES ARE AWARE OF ALL REQUIREMENTS, REGARDLESS OF WHERE THE REQUIREMENTS OCCUR IN THE CONTRACT DOCUMENTS, WHICH MIGHT AFFECT THE WORK OF THAT PARTY AND THAT THE MOST UP TO DATE DOCUMENTS ARE BEING REFERENCED.
2. AS PART OF THE CONTRACTORS RESPONSIBILITY TO COORDINATE THE WORK OF ALL SUB-CONTRACTORS, TRADES AND SUPPLIERS, THE CONTRACTOR SHALL ENDEAVOR TO IDENTIFY AND NOTIFY THE ARCHITECT OF ANY CONFLICTS BETWEEN THE WORK OF DIFFERENT PARTIES AT THE EARLIEST POSSIBLE DATE SO AS TO ALLOW REASONABLE AND ADEQUATE TIME FOR THE CONFLICT TO BE RESOLVED WITHOUT DELAYING THE WORK. ALL DEVIATIONS FROM THAT WHICH IS REQUIRED BY THE CONTRACT DOCUMENTS MUST BE REVIEWED IN ADVANCE BY THE ARCHITECT.
3. THE CONTRACTOR SHALL NOTIFY THE OWNER REPRESENTATIVE OF ANY CONFLICTS BETWEEN VENDOR DRAWINGS AND THE CONSTRUCTION DOCUMENTS. LATEST VENDOR DRAWINGS SHALL BE VERIFIED WITH OWNER AND ARCHITECT.
4. IN THE CASE OF CONFLICTS IN THE CONTRACT DOCUMENTS THE MOST STRINGENT REQUIREMENT GOVERNS

DEFERRED SUBMITTAL REQUIREMENTS

DEFERRED SUBMITTALS ARE THOSE PORTIONS OF DESIGN THAT ARE NOT SUBMITTED AT THE TIME OF THE PERMIT APPLICATION AND HAVE RECEIVED PRIOR APPROVAL FROM THE BUILDING OFFICIAL TO BE DEFERRED. THE DEFERRED SUBMITTALS SHALL BE SUBMITTED TO THE ARCHITECT AND GENERAL CONTRACTOR WITHIN SIX WEEKS TO COMMENCEMENT OF CONSTRUCTION TO THIS PORTION OF WORK. DEFERRED SUBMITTALS SHALL BE SUBMITTED TO THE ARCHITECT AND GENERAL CONTRACTOR WITHIN FOUR WEEKS OF THE AWARD OF THE CONTRACT TO THE GENERAL CONTRACTOR. THIS PROCESS MAY VARY, BUT SHOULD ALLOW FOR POSSIBLE 4-6 WEEK REVIEW PROCESS. CONTRACTOR IS RESPONSIBLE TO COORDINATE FOR REVIEW TIMES IN CRITICAL PATH OF CONSTRUCTION.

DEFERRED SUBMITTAL PROCESS

1. THE DEFERRED SUBMITTAL SHALL FIRST BE REVIEWED BY THE GENERAL CONTRACTOR FOR COMPLIANCE WITH THE CONSTRUCTION DOCUMENTS. THE SUBMITTAL MUST BE REVIEWED, APPROVED, STAMPED AND SIGNED BY THE GENERAL CONTRACTOR BEFORE BEING SUBMITTED TO THE ARCHITECT.
2. THE GENERAL CONTRACTOR SHALL SUBMIT THE DEFERRED SUBMITTAL TO THE ARCHITECT.
3. THE DEFERRED SUBMITTAL ITEMS WILL BE REVIEWED BY THE ENGINEER OR ARCHITECT IN RESPONSIBLE CHARGE. THE ENGINEER OR ARCHITECT WILL ATTACH A LETTER TO THE SUBMITTAL STATING THAT THE DEFERRED ITEM IS IN CONFORMANCE WITH THE DESIGN OF THE STRUCTURE.
4. THE APPROVED SUBMITTALS WILL BE RETURNED TO THE GENERAL CONTRACTOR. THE CONTRACTOR SHALL BE RESPONSIBLE FOR CITY SUBMITTAL AND ALL APPROVALS REQUIRED BY THE CITY.
5. THE GENERAL CONTRACTOR SHALL MAINTAIN ONE SET OF THE APPROVED SUBMITTAL ON SITE FOR REFERENCE BY THE CITY INSPECTOR.
6. THE DEFERRED SUBMITTAL ITEMS SHALL NOT BE INSTALLED UNTIL SUBMITTAL DOCUMENTS HAVE BEEN APPROVED BY BUILDING OFFICIAL. ALL WORK COMPLETED PRIOR TO APPROVAL AND REQUIRES CHANGE OR MODIFICATION DUE TO APPROVALS IS THE SOLE RESPONSIBILITY OF THE CONTRACTOR.
7. SEE STRUCTURAL NOTES FOR ADDITIONAL REQUIREMENTS FOR STRUCTURAL DEFERRED SUBMITTALS.
8. COORDINATE WITH GENERAL NOTES OF STRUCTURAL, MECHANICAL, AND ELECTRICAL FOR ADDITIONAL INSTRUCTIONS.

DEFERRED SUBMITTAL ITEMS

1. FIRE SPRINKLING DRAWINGS: THESE DRAWINGS SHALL INCLUDE THE DESIGN CALCULATIONS, DESIGN DRAWINGS, APPROVAL FROM THE FIRE MARSHALL PRIOR TO SUBMITTING TO THE DESIGN TEAM FOR FINAL ACCEPTANCE. FIRE SPRINKLER CONTRACTOR/ DESIGN MUST VERIFY W/ P.C.F.D. ALL FIRE SPRINKLERS REQUIREMENTS FOR PLACEMENT OF SPRINKLERS AT DECKS. NO REVIEW WILL BE PERFORMED IF THE SUBMITTAL IS NOT COMPLETE. THE CONTRACTOR WILL ALSO BE RESPONSIBLE FOR ANY THIRD PARTY REVIEW COSTS REQUIRED BY LOCAL JURISDICTIONS FIRE AUTHORITY.
2. FIRE ALARM DESIGN: THE FIRE ALARM DEVICES SHOWN ON THE DRAWINGS ARE DIAGRAMATIC. IT IS THE RESPONSIBILITY OF THE FIRE ALARM CONTRACTOR TO PROVIDE A SYSTEM THAT MEETS THE FULL INTENT OF NFPA 72. THE SUB CONTRACTOR WILL BE RESPONSIBLE TO TEST TO VERIFY THE REQUIREMENTS OF NFPA 72 ARE BEING MET. IF ADDITIONAL FIRE ALARM DEVICES ARE REQUIRED, THE DEVICES WILL BE THE REQUIREMENTS OF THE FIRE ALARM CONTRACTOR TO PROVIDE A COMPLETE SYSTEM TO MEET NFPA 72.

BUILDING CODES

ALL CONSTRUCTION IN ASSOCIATION WITH THIS PROJECT SHALL COMPLY WITH THE STATE ADOPTED CODES LISTED BELOW:

- 2018 EDITION OF THE INTERNATIONAL BUILDING CODE (IBC), INCLUDING APPENDIX J
- 2020 EDITION OF THE NATIONAL ELECTRICAL CODE (NEC)
- 2018 EDITION OF THE INTERNATIONAL PLUMBING CODE (IPC)
- 2018 EDITION OF THE INTERNATIONAL MECHANICAL CODE (IMC)
- 2018 EDITION OF THE INTERNATIONAL ENERGY CONSERVATION CODE (IECC)
- 2018 EDITION OF THE INTERNATIONAL FIRE CODE (IFC)
- 2018 EDITION OF THE INTERNATIONAL FUEL GAS CODE (IFGC)
- ICC/ANSI A117.1-2009

NOTE:
THE CONTRACTOR IS TO CONTACT THE UTAH DIVISION OF AIR QUALITY, (801) 536-4000. COMPLIANCE WITH THEIR REQUIREMENTS IS MANDATORY.

SHEET INDEX

aeurbia architects and engineers
909 West South Jordan Parkway
south jordan, utah 84095
phone: 801.746.0456 - fax: 801.575.6456
webpage: aeurbia.com

LICENSED ARCHITECT 174600 JAMES MICHAEL WALKER STATE OF UTAH

12/2/2022 6:03:19 PM

VELOCIRAX TI
LEHI BUSINESS PARK
850 EAST MILL POND DRIVE LEHI, UTAH

Revision Schedule

MARK	DESCRIPTION	Revision Date

AE2021.415

COVER SHEET

PROJECT STATUS

DATE: **PROJECT ISSUE DATE**

SHEET #:

G001

12/2/2022 6:03:19 PM

P:\AE URBIA JOBS\2021\AE2021.415 - WIRE HORAN - Velocirax TI - Lehi Business Park\1. Architecture\VELOCIRAX TI.rvt

GENERAL PROJECT NOTES

DEFINITIONS

1. PROVIDE:
MEANS TO PROVIDE, FURNISH AND INSTALL, A COMPLETE SYSTEM AND READY FOR OPERATIONS AND USE FOR PURPOSE INTENDED INCLUDES THOSE ITEMS SPECIFIED WITHIN THE DRAWINGS AND SPECIFICATIONS AS WELL AS THOSE ITEMS THAT ARE REQUIRED TO PROVIDE A COMPLETE SYSTEM. THE CONTRACTOR AND SUB CONTRACTORS ARE REQUIRED TO PROVIDE THE FULL AND COMPLETE SYSTEM.

2. FURNISH:
MEANS TO SUPPLY, PURCHASE, PROCURE AND DELIVER COMPLETE WITH RELATED ACCESSORIES, READY FOR ASSEMBLY, APPLICATION, INSTALLATION, AND SIMILAR OPERATIONS, AS APPLICABLE IN EACH INSTANCE.

3. INSTALL:
MEANS TO CONSTRUCT, ASSEMBLE, ERECT, MOUNT, ANCHOR, PLACE, CONNECT, APPLY AND SIMILAR OPERATIONS, COMPLETE WITH RELATED ACCESSORIES, AS APPLICABLE IN EACH INSTANCE.

4. EQUIVALENT:
MEANS "EQUIVALENT AS ACCEPTED BY THE ARCHITECT." WITH RESPECT TO PRODUCTS, EQUIVALENT MEANS A LIKE DEGREE OF FEATURES, ATTRIBUTES, PERFORMANCES, OR QUALITIES DEEMED ESSENTIAL TO THE DESIGN INDICATED INSTEAD, THE TERM INTENDED TO MEAN ARCHITECT WILL CONSIDER SUBSTITUTION PROPOSALS FOR THE PRODUCT. DO NOT ASSUME THAT SUBSTITUTE PRODUCTS ARE ACCEPTABLE. SUBSTITUTIONS MADE BY THE CONTRACTOR WITHOUT FULL AND FINAL APPROVAL, MAY REQUIRE TO BE REMOVED IF NOT DEEMED ACCEPTABLE BY THE ARCHITECT. ALL COSTS ASSOCIATED TO REMOVAL OF SUBSTITUTION NOT APPROVED, AND INSTALLATION OF ACCEPTED PRODUCTS WILL BE THE RESPONSIBILITY OF THE GENERAL CONTRACTOR.

GENERAL NOTES

1. SITE VISITS
VISITS TO THE JOB SITE BY ANY REPRESENTATIVE OF THE ARCHITECT DO NOT CONSTITUTE APPROVAL OF THE WORK PERFORMED BY THE CONTRACTOR OR HIS SUBCONTRACTORS, AND ARE MERELY FOR THE PURPOSE OF OBSERVING THE WORK PERFORMED.

2. DISCREPANCIES IN THE FIELD
CONTRACTOR SHALL NOTIFY ENGINEER / ARCHITECT OF ANY DISCREPANCIES, OMISSIONS OR CONFLICTS BETWEEN THE VARIOUS ELEMENTS OF THE WORKING DRAWINGS AND / OR SPECIFICATIONS BEFORE PROCEEDING WITH ANY WORK INVOLVED. FIELD CONFIRMATION OF DISCREPANCIES SHALL BE RECORDED ON REPRODUCIBLE DOCUMENT AND IMMEDIATELY TRANSMITTED TO ARCHITECT FOR PROJECT RECORD, COORDINATION, AND NECESSARY RESOLUTION PRIOR TO CONTINUING WITH WORK. IN ALL CASES, UNLESS OTHERWISE DIRECTED, THE MOST STRINGENT REQUIREMENTS SHALL GOVERN AND BE PERFORMED.

3. FIELD MEASUREMENTS
VERIFY FIELD MEASUREMENTS BEFORE ORDERING MATERIALS AND PREFABRICATED ITEMS. ANY NECESSARY ADJUSTMENTS BETWEEN FIELD MEASUREMENTS AND DRAWINGS SHALL BE MADE IN CONSULTATION WITH THE ARCHITECT.

4. SCALE OF DRAWINGS
DO NOT SCALE DRAWINGS. ARCHITECT SHALL NOT BE RESPONSIBLE FOR DIMENSIONS, TAKE-OFFS OR CALCULATIONS BASED ON DIGITAL MEDIA. REFER TO PRINTED DIMENSIONS ONLY. DRAWINGS OF A LARGER SCALE TAKE PRECEDENT OVER DRAWINGS OF A SMALLER SCALE.

5. CONTRACT DOCUMENTS AT SITE
THE CONTRACTOR SHALL MAINTAIN CURRENT PERMIT DRAWINGS; SHOP DRAWINGS; REVISED DRAWINGS; CLARIFICATION DRAWINGS, ADDENDA; CHANGE ORDERS; BULLETINS; INSPECTIONS; TEST CERTIFICATIONS AND RECORDS; PRODUCT SUBMITTAL DATA AND SAMPLES. FIELD OFFICE SHALL CONTAIN A CURRENT COPY OF ALL GOVERNING BUILDING CODE(S). MAKE DOCUMENTS AVAILABLE AT ALL TIMES FOR ARCHITECT'S REVIEW. ALL DRAWINGS MUST BE CLEARLY MARKED AS TO THE FINAL APPROVED DRAWINGS.

6. RECORD DRAWINGS (AS BUILTS)
THE CONTRACTOR SHALL MAINTAIN ACCURATELY DIMENSIONED RECORDS OF ALL UNDERGROUND LINES, SERVICES, AND UTILITIES, AS WELL AS ANY DISCREPANCIES OR REQUIRED CHANGES IN THE CONTRACT DOCUMENTS. AT THE END OF THE PROJECT, FORWARD TO ARCHITECT FOR FUTURE RECORDS. ONE DIGITAL COPY OF COMPLETE RECORD DRAWINGS TO OWNER IN PDF FORMAT AFTER COMPLETING FINAL PUNCH LIST.

7. CONFLICTING DIMENSIONS
WRITTEN DIMENSIONS TAKE PRECEDENCE OVER SCALED SIZES; DO NOT SCALE DRAWINGS TO DETERMINE ANY LOCATIONS. THE ARCHITECT SHALL BE NOTIFIED OF ANY DISCREPANCIES, PRIOR TO CONTINUING WITH WORK.

8. SHOP DRAWING AND SUBMITTAL REVIEW
SHOP DRAWINGS AND SUBMITTALS SHALL BE REVIEWED BY THE ENGINEER / ARCHITECT AND **OWNER** PRIOR TO ORDERING, FABRICATION OR ERECTION FOR ANY PREFABRICATED OR MANUFACTURED - DESIGNED COMPONENTS.

9. SUPPORTING STRUCTURES
SIZES, LOCATIONS, LOADS, AND ANCHORAGE OF EQUIPMENT SHALL BE VERIFIED IN THE FIELD WITH EQUIPMENT MANUFACTURES (SUPPLIERS) PRIOR TO FABRICATION OR INSTALLATION OF SUPPORTING STRUCTURES.

10. TEMPORARY BRACING
TEMPORARY BRACING SHALL BE PROVIDED WHEREVER NECESSARY TO TAKE CARE OF ALL LOADS TO WHICH THE STRUCTURE MAY BE SUBJECTED, INCLUDING WIND. SUCH BRACING SHALL BE LEFT IN PLACE AS LONG AS MAY BE REQUIRED FOR SAFETY, OR UNTIL ALL THE STRUCTURAL ELEMENTS ARE COMPLETED. ALL BRACING SHALL BE THE RESPONSIBILITY OF THE CONTRACTOR.

11. DESIGN LOADS
DURING AND AFTER CONSTRCITON THE CONTRACTOR AND/OR OWNER SHALL KEEP LOADS ON THE STRUCTURE WITHIN THE LIMITS OF THE DESIGN LOAD.

12. INTENT OF THE DOCUMENTS
DRAWINGS AND SPECIFICATIONS ARE INTENDED TO PROVIDE THE BASIS FOR THE PROPER COMPLETION OF THE PROJECT, SUITABLE FOR THE INTENDED USE OF THE OWNER. ITEMS NOT EXPRESSLY SET FORTH WITHIN THE DRAWINGS AND SPECS, BUT WHICH ARE REASONABLY IMPLIED FOR COMPLETION OF A COMPLETE SYSTEM, OR NECESSARY, FOR THE PROPER PERFORMANCE OF THE WORK SHALL BE INCLUDED.

13. DRAWINGS AND SPECIFICATIONS
SPECIFICATIONS ARE INTENDED TO BE COMPLIMENTARY AND SUPPLEMENTAL TO THE DRAWINGS. NO RELATIVE IMPORTANCE OF DRAWINGS VERSUS SPECIFICATIONS HAS BEEN ESTABLISHED AND NONE SHOULD BE ASSUMED, BUT THE MOST STRINGENT CONDITIONS SHOULD BE ASSUMED FOR ALL BIDDING AND CONSTRUCTION REQUIREMENTS. IN THE EVENT OF DISCREPANCIES OR CONFLICTS, THE ARCHITECT SHALL BE CONSULTED IN ORDER TO RENDER AN INTERPRETATION. BIDDING, PRICING OR CONSTRUCTION DONE PRIOR TO RECEIVING FINAL BUILDING DEPARTMENT PERMITS IS AT THE CONTRACTORS OWN RISK. CHANGES TO THE DRAWINGS MAY BE REQUIRED AS PART OF THE PLAN CHECK AND/ OR OWNER REVIEW PROCESS. J.M. WILLIAMS AND ASSOCIATES/AE URBIA AND ITS CONSULTING ENGINEERS WILL NOT BE HELD LIABLE FOR, NOR COMPENSATE FOR, CHANGES TO THESE DRAWINGS BEFORE FINAL JURISDICTION AND OWNER APPROVAL IS OBTAINED.

14. WORK NOT INCLUDED
ANY ITEM INDICATED ON THE DRAWINGS AS "N.I.C." (NOT IN CONTRACT), OR OTHERWISE DESIGNATED TO BE DONE BY OTHERS IS NOT A PART OF THE CONTRACT. INSTALLATION AND/OR BACKING MAY BE REQUIRED FOR SOME EQUIPMENT FURNISHED BY OWNER OR OWNER'S SUBCONTRACTOR. REFER TO DRAWINGS FOR SPECIFIC REQUIREMENTS.

15. FURNISHINGS BY OWNER
ALL FURNITURE, PLANTS, INTERIOR SIGNAGE, FILES / FILING CABINETS, APPLIANCES, OFFICE EQUIPMENT TO BE FURNISHED, INSTALLED AND PAID FOR BY THE OWNER / TENANT, UNLESS NOTED OTHERWISE.

16. CODE CONFORMANCE
ALL WORK SHALL CONFORM TO THE LATEST ADOPTED EDITIONS OF ALL APPLICABLE BUILDING CODES, THE AMERICANS WITH DISABILITIES ACT, AS WELL AS ALL OTHER LOCAL GOVERNING CODES AND ORDINANCES:

a. PLUMBING:
ALL PLUMBING WORK SHALL BE IN STRICT ACCORDANCE WITH THE LATEST EDITION OF THE INTERNATIONAL PLUMBING CODE, AND LOCAL ORDINANCES. ALL PLUMBING WORK AND FIXTURES MUST MEET THE APPROVAL OF THE OWNER, CONTRACTOR, ARCHITECT/ENGINEER, TENANT AND THE BUILDING OFFICIAL.
b. HVAC:
ALL HVAC WORK SHALL BE IN STRICT ACCORDANCE WITH THE LATEST EDITION OF THE INTERNATIONAL MECHANICAL CODE, AND LOCAL ORDINANCES. HVAC WORK, UNITS, AND CONTROLS, MUST MEET THE APPROVAL OF THE OWNER, CONTRACTOR, ARCHITECT/ENGINEER, TENANT, AND THE BUILDING OFFICIAL.
c. ELECTRICAL:
ALL ELECTRICAL WORK SHALL BE IN STRICT ACCORDANCE WITH THE LATEST EDITION OF THE ICC ELECTRICAL CODE AND LOCAL ORDINANCES. ALL ELECTRICAL WORK, FIXTURES, SWITCHES, ETC... MUST MEET APPROVAL OF THE OWNER, CONTRACTOR, ARCHITECT / ENGINEER, TENANT AND BUILDING OFFICIAL.
d. REST ROOMS, ETC., SHALL COMPLY WITH THE LATEST ADA REQUIREMENTS, NATIONAL AND LOCAL.
e. CONSTRUCTION MUST BE IN COMPLIANCE WITH THE INTERNATIONAL ENERGY CONSERVATION CODE.
f. CONSTRUCTION MUST BE IN COMPLIANCE WITH THE CURRENT INTERNATIONAL FIRE CODE.

17. REFERENCE STANDARDS
COMPLY WITH ASSOCIATION, TRADE, FEDERAL, COMMERCIAL, ASTM, AND OTHER SIMILAR STANDARDS REFERENCED WITHIN INDIVIDUAL SECTIONS, EXCEPT WHERE MORE EXPLICIT OR STRINGENT REQUIREMENTS ARE INDICATED, OR REQUIRED BY APPLICABLE CODES. REFERENCE STANDARDS HAVE SAME FORCE AND EFFECT AS IF BOUND INTO CONTRACT DOCUMENTS. SHOULD SPECIFIED REFERENCE STANDARDS CONFLICT WITH CONTACT DOCUMENTS, REQUEST CLARIFICATION FROM ARCHITECT BEFORE PROCEEDING.

18. APPROVAL
ALL WORK MUST MEET THE APPROVAL OF THE BUILDING OWNERS, THE TENANT (IF APPLICABLE), THE DESIGNER, AND THE BUILDING AND ZONING DEPARTMENTS.

19. CHANGES
ANY AND ALL CHANGES OR VARIATIONS FROM THESE DOCUMENTS MUST BE APPROVED IN WRITING BY THE OWNERSHIP PRIOR TO MAKING THEM.

CONTRACTOR REQUIREMENTS

1 EXISTING CONDITIONS
THE CONTRACTOR SHALL BE RESPONSIBLE TO FIELD VERIFY ALL EXISTING SITE CONDITIONS, UTILITIES, CONNECTIONS, LOCATIONS, ETC, AND NOTIFY THE ARCHITECT/ENGINEER OF ANY DISCREPANCIES PRIOR TO COMMENCEMENT OF CONSTRUCTION.

2 EXISTING UTILITIES
IT SHALL BE THE RESPONSIBILITY OF THE CONTRACTOR TO LOCATE ALL EXISTING UTILITIES, WHETHER SHOWN HEREIN OR NOT, AND TO PROTECT THEM FROM DAMAGE. THE CONTRACTOR SHALL BEAR ALL EXPENSE FOR THE REPAIR OR REPLACEMENT OF UTILITIES AND ALL OTHER PROPERTY DAMAGED BY OPERATIONS IN CONJUNCTION WITH EXECUTION OF WORK.

3 CODE COMPLIANCE
THE CONTRACTOR SHALL BE REQUIRED TO MEET ALL NATIONAL, STATE AND LOCAL, AND RELATED CODES FOR STANDARD CONSTRUCTION PRACTICES.

4 INSTALLATION STANDARDS
ALL MANUFACTURED MATERIALS AND PRODUCTS SHALL BE APPLIED, INSTALLED, CONNECTED, CLEANED AND CONDITIONED IN ACCORDANCE WITH THE MANUFACTURER'S PRINTED INSTRUCTIONS. ALL REFERENCES TO STANDARDS OR TO MANUFACTURER'S SPECIFICATIONS SHALL BE TO THE LATEST EDITIONS OR LATEST AMENDMENTS.

5 INSPECTIONS
ANY SPECIAL INSPECTIONS, TESTS, AND OTHER SERVICES SPECIFIED OR REQUIRED ARE THE RESPONSIBILITY OF THE CONTRACTOR AND ARE TO BE PAID BY THE OWNER. REFER TO INDIVIDUAL SELECTIONS FOR ADDITIONAL REQUIREMENTS. EMPLOYMENT OF TESTING LABORATORY SHALL IN NO WAY RELIEVE CONTRACTOR OF OBLIGATION TO PERFORM WORK IN ACCORDANCE WITH REQUIREMENTS OF CONTRACT DOCUMENTS.

6 PROJECT LOG
MAINTAIN DAILY LOG CONTAINING ALL INFORMATION REGARDING CONSTRUCTION OPERATIONS AND OTHER OCCURRENCES PERTAINING TO THE PROJECT. MAKE LOG AVAILABLE FOR ARCHITECT'S REVIEW.

7 WORK PROGRESS SCHEDULE
MAINTAIN AN UPDATED WORK PROGRESS SCHEDULE POSTED IN A VISIBLE PLACE LOCATED IN FIELD OFFICE. UPDATE SCHEDULE DAILY TO REFLECT WORK PROGRESS.

8 BUILDING PERMITS
THE GENERAL BUILDING PERMITS SHALL BE PAID FOR BY THE OWNER AND SECURED BY THE GENERAL CONTRACTOR. ALL OTHER REQUIRED PERMITS SHALL BE SECURED AND PAID FOR BY THE CONTRACTOR OR SUBCONTRACTOR DIRECTLY RESPONSIBLE.

9 FINAL APPROVALS
CONTRACTOR SHALL ASSIST OWNER IN OBTAINING FINAL APPROVAL OF LOCAL HEALTH DEPARTMENT AND THE TEMPORARY AND FINAL CERTIFICATES OF OCCUPANCY.

10 REQUIRED LICENSES
ADDITIONAL REQUIRED CITY AND COUNTY LICENSES SHALL BE ACQUIRED AND PAID FOR BY THE INDIVIDUAL TRADES.

11 WORKMAN'S COMPENSATION
ALL CONTRACTORS SHALL HAVE VALID CERTIFICATES OF WORKMAN'S COMPENSATION OF FILE WITH THE APPROPRIATE AGENCIES.

12 SAFETY
CONTRACTOR SHALL TAKE ALL NECESSARY PRECAUTIONS TO ENSURE THE SAFETY OF THE OCCUPANTS AND WORKERS AT ALL TIMES, AND SHALL BE RESPONSIBLE FOR SAFETY AND PROTECTION WITHIN AND ADJACENT TO THE JOB SITE.

13. CONTRACTOR'S FIELD OFFICE
PROVIDE AND MAINTAIN A FIELD OFFICE ON THE PREMISES WHERE DIRECTED. OFFICE SHALL BE OF NEAT, SUBSTANTIAL CONSTRUCTION. PROVIDE HANGING PLAN FILES AND MAINTAIN WITH ALL CURRENT DRAWINGS.
a. STORAGE STRUCTURE: PROVIDE AND MAINTAIN, WHERE DIRECTED, A WATERTIGHT STORAGE STRUCTURE FOR ALL MATERIALS WHICH MIGHT BE DAMAGED BY WEATHER, INCLUDING STORAGE FACILITIES FOR CONCRETE TEST SAMPLES, OR OTHER MATERIAL SAMPLES REQUIRED FOR WORK.
b. COSTS: PAY COSTS FOR A LOCAL BUSINESS TELEPHONE FOR USE BY CONTRACTOR, OWNER AND ARCHITECT THROUGHOUT CONTRACT PERIOD.
c. COMMUNICATION EQUIPMENT: PROVIDE A TELEPHONE ON SITE. ASSIGN A RESPONSIBLE PERSON TO ANSWER ALL TELEPHONE CALLS IN EVENT THE SUPERINTENDENT IS ABSENT FROM THE PREMISES. PROVIDE APPROVED MEANS TO ESTABLISH URGENT COMMUNICATIONS (CELLULAR TELEPHONE OR PAGER).

14. TEMPORARY FACILITIES
PROVIDE TEMPORARY FACILITIES AND CONNECTIONS AS REQUIRED FOR THE PROPER COMPLETION OF THE PROJECT. PROVIDE AND MAINTAIN TEMPORARY UTILITY SERVICES. PROVIDE SUITABLE WASTE DISPOSAL UNITSAND EMPTY REGULARLY. DO NOT PERMIT ACCUMULATION OF TRASH AND WASTE MATERIALS. PROVIDE TEMPORARY SANITARY FACILITIES AS REQUIRED.

15. STORAGE AND PROTECTION
STORE AND PROTECT PRODUCTS IN ACCORDANCE WITH MANUFACTURER'S INSTRUCTIONS WITH LABELS INTACT AND LEGIBLE. STORE SENSITIVE PRODUCTS IN WEATHERTIGHT, CLIMATE CONTROLLED ENCLOSURES. PROVIDE OFFSITE STORAGE AND PROTECTION WHEN SITE DOES NOT PERMIT ON SITE STORAGE.

16. FIELD QUALITY CONTROL
EMPLOY ONLY EXPERIENCED INSTALLERS AND FURNISH EVIDENCE OF EXPERIENCE IF REQUESTED. USE OF ANY SUBCONTRACTOR OR INSTALLER IS SUBJECT TO OWNER'S APPROVAL. EMPLOY FULL-TIME, COMPETENT SUPERINTENDENT AS WELL AS NECESSARY ASSISTANTS. SUPERINTENDENT SHALL REPRESENT THE CONTRACTOR AND ALL COMMUNICATIONS GIVEN TO THE SUPERINTENDENT SHALL BE AS BINDING AS IF GIVEN TO THE CONTRACTOR.

17. SOURCE QUALITY CONTROL
PROVIDE PRODUCTS OF ACCEPTABLE MANUFACTURERS, WHICH HAVE BEEN IN SATISFACTORY USE IN SIMILAR SERVICE FOR THREE YEARS, UNLESS MORE STRINGENT CRITERIA ARE SPECIFIED IN INDIVIDUAL SECTIONS. USE OF ANY SUPPLIER IS SUBJECT TO OWNER'S APPROVAL.

18. PRODUCT HANDLING
TRANSPORT AND HANDLE PRODUCTS IN ACCORDANCE WITH MANUFACTURER'S INSTRUCTIONS. DELIVER PRODUCTS IN UNDAMAGED CONDITION, IN MANUFACTURER'S ORIGINAL UNOPENED CONTAINER'S OR PACKING, WITH IDENTIFYING LABELS INTACT AND LEGIBLE. PROMPTLY INSPECT SHIPMENTS TO ENSURE THAT PRODUCTS COMPLY WITH REQUIREMENTS OF CONTRACT DOCUMENTS, QUANTITIES ARE CORRECT, AND PRODUCTS ARE UNDAMAGED.

19. COMPLIANCE WITH MANUFACTURER'S INSTRUCTIONS
HANDLE, INSTALL, ERECT, CONNECT, CONDITION, USE, ADJUST, AND CLEAN PRODUCTS IN STRICT ACCORDANCE WITH MANUFACTURER'S INSTRUCTION AND IN CONFORMITY WITH SPECIFIED REQUIREMENTS, INCLUDING EACH STEP IN SEQUENCE. DO NOT OMIT PREPARATORY STEPS OR INSTALLATION PROCEDURES UNLESS SPECIFICALLY MODIFIED OR EXEMPTED BY CONTRACT DOCUMENTS. SHOULD JOB CONDITIONS OR SPECIFIED REQUIREMENTS CONFLICT WITH MANUFACTURER'S INSTRUCTIONS, REQUEST CLARIFICATION IN WRITING FROM ARCHITECT BEFORE PROCEEDING. INSTALL MATERIALS IN PROPER RELATION WITH ADJACENT CONSTRUCTION AND WITH PROPER APPEARANCE.

20. MANUFACTURER'S FIELD SERVICES
WHEN SPECIFIED IN INDIVIDUAL SECTIONS, REQUIRE MATERIAL OR PRODUCT SUPPLIERS OR MANUFACTURERS TO PROVIDE QUALIFIED STAFF PERSONNEL TO OBSERVE SITE CONDITIONS, CONDITIONS OF SURFACES, QUALITY OF WORKMANSHIP, AND CONDITIONS OF INSTALLATION AS APPLICABLE AND TO INITIATE ADDITIONAL INSTRUCTIONS WHEN NECESSARY.

21. SUBSTITUTIONS
PROPOSALS FOR SUBSTITUTION OF MATERIALS, EQUIPMENT, AND METHODS WILL ONLY BE CONSIDERED WHEN ACCOMPANIED BY FULL AND COMPLETE TECHNICAL DATA AS WELL AS ANY OTHER INFORMATION REQUIREDTO EVALUATE THE PROPOSED SUBSTITUTION. SUBSTITUTIONS ARE UNACCEPTABLE UNLESS SPECIFICALLY APPROVED BY THE ARCHITECT. IN THE EVENT OF SUBSTITUTION PROPOSALS AFTER THE CONTRACT HAS BEEN AWARDED, ALL SUCH PROPOSALS SHALL BE ACCOMPANIED BY SUBSTANTIAL COST SAVINGS FOR THE OWNER.

22. AVAILABILITY OF PRODUCTS
VERIFY PRIOR TO CONSTRUCTION START THAT ALL SPECIFIED ITEMS WILL BE AVAILABLE IN TIME FOR INSTALLATION DURING ORDERLY AND TIMELY PROGRESS OF THE WORK. IN THE EVENT SPECIFIED ITEM OR ITEM WILL NOT BE SO AVAILABLE, NOTIFY THE ARCHITECT PRIOR TO START OF CONSTRUCTION. COST OF DELAYS BECAUSE OF NON-AVAILABILITY OF SPECIFIED ITEMS OR SUBSTITUTED ITEMS, WHEN THE CONTRACTOR COULD HAVE AVOIDED SUCH DELAYS, WILL BE BORNE BY THE CONTRACTOR.

23. PRODUCTS AND MATERIALS
PROVIDE PRODUCTS AND MATERIALS SPECIFIED. REQUEST ARCHITECTS SELECTION OF COLORS AND ACCESSORIES IN SUFFICIENT TIME TO AVOID DELAYING PROGRESS OF THE WORK.

24. VERIFICATION OF WORK
CONTRACTOR SHALL VERIFY, AND BE RESPONSIBLE FOR, ALL WORK AND MATERIALS - INCLUDING THOSE FURNISHED BY SUBCONTRACTORS. CONTRACTOR SHALL VERIFY ALL CONDITIONS, DIMENSIONS AND ELEVATIONS, ETC., AT THE SITE AND SHALL COORDINATE WORK PERFORMED BY ALL TRADES.

25. CONFORMANCE WITH DOCUMENTS
ANY AND ALL CHANGES OR VARIATIONS FROM THESE DOCUMENTS MUST BE APPROVED IN WRITING PRIOR TO MAKING THEM.

26. NON-CONFORMING WORK
ANY WORK THAT DOES NOT CONFORM TO THE CONTRACT DOCUMENTS SHALL BE REMOVED AND REPLACED AT NO ADDITIONAL EXPENSE TO THE OWNER.

27. PRODUCT IDENTIFICATIONS
NAMEPLATES, TRADEMARKS, LOGOS, AND OTHER IDENTIFYING MARKS ON PRODUCTS ARE NOT PERMITTED ON SURFACES EXPOSED TO VIEW IN PUBLIC AREAS, INTERIOR OR EXTERIOR. PLUMBING, MECHANICAL, AND ELECTRICAL EQUIPMENT NOT EXPOSED TO PUBLIC VIEW ARE EXCLUDED FROM FOREGOING LIMITATION. REQUIRED UL OR FM LABELS ARE ALSO EXCLUDED.

28. PROTECTION OF ADJACENT WORK
PROVIDE TEMPORARY PROTECTION FOR ADJACENT AREAS TO PREVENT DAMAGE BY INSTALLATION OF NEW WORK OR DEMOLITION OF EXISTING CONSTRUCTION. PROMPTLY REPAIR ANY DAMAGE AT NO ADDITIONAL COST TO THE OWNER. PROTECT ADJACENT AREAS FROM CONTAMINATION BY CONSTRUCTION DUST AND DEBRIS. PROVIDE TEMPORARY BARRICADES AS NECESSARY TO ENSURE PROTECTION OF THE PUBLIC. MAINTAIN EGRESS WITHIN AND AROUND CONSTRUCTION AREAS.

29. DAMAGED PRODUCTS
DO NOT USE PRODUCTS IN WORK, WHICH HAVE DETERIORATED, BECOME DAMAGED, OR ARE OTHERWISE UNFIT FOR USE. RESTORE UNITS DAMAGED DURING INSTALLATION. REPLACE UNITS, WHICH CANNOT BE RESTORED AT NO ADDITIONAL EXPENSE TO THE OWNER.

30. SECURITY
PROVIDE FACILITIES TO PROTECT WORK FROM UNAUTHORIZED ENTRY, VANDALISM, AND THEFT. CONDUCT OPERATIONS IN MANNER TO AVOID RISK OF LOSS, THEFT, OR DAMAGE BY VANDALISM.

31. TEMPORARY CONTROLS
a. HEAT:
PRIOR TO ENCLOSURE, PROVIDE HEATING AS NECESSARY TO PROTECT MATERIALS, PRODUCTS, AND FINISHES FROM DAMAGE DUE TO TEMPERATURE OR HUMIDITY. ENCLOSURE IS DEFINED AS STATE OF CONSTRUCTION WHEN EXTERIOR WALLS ARE ERECTED, DOORS AND WINDOWS ARE INSTALLED AND GLAZED, ROOF DECK AND ROOFING ARE COMPLETE, AND WHEN OTHER OPENINGS IN EXTERIOR ENVELOPE ARE EQUIPPED WITH TEMPORARY CLOSURES. EXCEPT WHERE INDICATED OTHERWISE IN INDIVIDUAL SPECIFICATION SECTIONS, MAINTAIN MINIMUM AMBIENT TEMPERATURE OF 50 DEGREES FIN AREAS WHERE CONSTRUCTION IS IN PROGRESS.
b. VENTILATION:
VENTILATE ENCLOSED AREAS TO ASSIST CURE OF MATERIALS, TO DISSIPATE HUMIDITY, AND TO PREVENACCUMULATION OF DUST, FUMES, VAPORS, OR GASES.
c. BARRIERS AND CLOSURES:
PROVIDE BARRIERS TO PREVENT UNAUTHORIZED ENTRY TO CONSTRUCTION AREAS AND TO PROTECT EXISTING FACILITIES AND ADJACENT PROPERTIES FROM DAMAGE FROM CONSTRUCTION OPERATION
d. FIRE PROTECTION:
COMPLY WITH LOCAL FIRE PROTECTION CODE AND GOVERNING AUTHORITIES. PROVIDE AND MAINTAIN ADEQUATE FIRE PROTECTION INCLUDING, WITHOUT LIMITATION, FIRE EXTINGUISHERS AND OTHER APPROPRIATE EQUIPMENT FOR FIRE EXTINGUISHING READY FOR IMMEDIATE USE. MAINTAIN ANY REQUIRED FIRE ALARM SYSTEMS IN OPERATION DURING CONSTRUCTION. DISTRIBUTE EQUIPMENT AROUND SITE AND PARTICULARLY IN IMMEDIATE VICINITY OF PERFORMANCE OF WELDING OR SIMILAR HAZARDOUS WORK.

32. INTERRUPTION OF SERVICES
INTERRUPTIONS TO ANY SERVICE FOR THE PURPOSE OF MAKING OR BREAKING A CONNECTION SHALL BE MADE ONLY AFTER CONSULTATION WITH THE OWNER AND SHALL BE AT SUCH TIME AND OF SUCH DURATION AS MAY BE DIRECTED.

33. EXCAVATIONS OR TRENCHING
KEEP THE INTERVALS BETWEEN EXCAVATION OR TRENCHING, INSTALLATION OF CONDUIT OR PIPING, AND BACK FILLING OPERATIONS TO AN ABSOLUTE MINIMUM. PROVIDE SUITABLE TEMPORARY COVERS FOR EXCAVATIONS OR TRENCHING CROSSING ROADWAYS, WALKS, OR OTHER TRAFFIC WAYS AS REQUIRED BY GOVERNING AGENCIES.

34. CUTTING AND PATCHING
DO NOT CUT AND PATCH IN A MANNER THAT WOULD RESULT IN A FAILURE OF THE WORK TO PERFORM AS INTENDED, DECREASE FIRE PERFORMANCE, DECREASE ACOUSTICAL PERFORMANCE, DECREASE ENERGY PERFORMANCE, DECREASE OPERATIONAL LIFE, OR DECREASE SAFETY FACTORS. DO NOT REMOVE OR ALTER STRUCTURAL COMPONENTS WITHOUT WRITTEN APPROVAL FROM THE ARCHITECT. CUT WITH TOOLS APPROPRIATE FOR MATERIALS TO BE CUT. PATCH WITH MATERIALS AND METHODS TO PRODUCE PATCH THAT IS NOT VISIBLE FROM A DISTANCE OF THREE FEET.

35. COORDINATION AND CLEARANCES
VERIFY AND COORDINATE CLEARANCES, DIMENSIONS, AND INSTALLATION OF ADJOINING CONSTRUCTION, EQUIPMENT, PIPING, DUCTS, CONDUITS, OR OTHER MECHANICAL OR ELECTRICAL ITEMS OR APPARATUS. VERIFY DIMENSIONS FOR PRODUCTS TO BE FITTED INTO WORK.
a. ATTACHMENTS AND CONNECTIONS:
PROVIDE ATTACHMENT AND CONNECTION DEVICES METHODS FOR SECURING AND ANCHORING WORK. SECURE IN PLACE WITH DEVICES DESIGNATED AND SIZED TO WITHSTAND STRESSES, VIBRATION, PHYSICAL DISTORTION, OR DISFIGUREMENT.
b. EXPANSION AND MOVEMENT:
ALLOW FOR EXPANSION OF MATERIALS AND BUILDING MOVEMENT.
c. ISOLATION OF DISSIMILAR ITEMS:
ISOLATE EACH UNIT OF WORK FROM INCOMPATIBLE WORK AS NECESSARY TO PREVENT DETERIORATION AND ELECTROLYTIC ACTION.
d. MAINTENANCE:
CLEAN AND PERFORM MAINTENANCE ON INSTALLED WORK AS FREQUENTLY AS NECESSARY THROUGH REMAINDER OF CONSTRUCTION PERIOD. LUBRICATE OPERABLE COMPONENTS TO ENSURE OPERABILITY WITHOUT DAMAGING EFFECTS.
e. ADJUSTMENTS: ADJUST OPERATING PRODUCTS AND EQUIPMENT TO ENSURE SMOOTH AND UNHINDERED OPERATION.

36. EXAMINATION OF CONDITIONS
EXAMINE SUBSTRATES AND CONDITIONS UNDER WHICH WORK IS TO BE PERFORMED. DO NOT COMMENCE WORK OVER UNSATISFACTORY CONDITIONS DETRIMENTAL TO PROPER AND TIMELY EXECUTION OF WORK. DO NOT PROCEED WITH WORK UNTIL UNSATISFACTORY CONDITIONS HAVE BEEN CORRECTED. COMMENCEMENT OF INSTALLATION CONSTITUTES ACCEPTANCE OF CONDITIONS AND COSTS OF ANY CORRECTIVE MEASURES ARE RESPONSIBILITY OF CONTRACTOR.

37. BACKING SUPPORT
CONTRACTOR SHALL PROVIDE BACKING SUPPORT OF ALL WALL, CEILING, AND PARTITION MOUNTED ITEMS SUCH AS TABLE BRACKETS, LIGHT FIXTURES, ARTIFACTS, SHELVING, EQUIPMENT, AND TELEVISIONS. COORDINATE LOCATIONS AND REQUIREMENTS WITH THE PLUMBING, MECHANICAL, ELECTRICAL DRAWINGS.

38. SECURE OPENINGS
EXTERIOR OPENINGS SHALL COMPLY WITH ALL SECURITY REQUIREMENTS AS OUTLINED IN ALL LOCAL BUILDING CODES AND ORDINANCES.

39. GLAZING REQUIREMENTS
GLASS AND GLAZING FOR ALL WINDOWS SHALL COMPLY WITH ALL APPLICABLE BUILDING CODES. IN ADDITION ALL WINDOWS MUST MEET THE "AAMA" WINDOW STANDARDS FOR INSTALLATION. THE CONTRACTOR SHALL OBTAIN, AND SHALL FOLLOW ALL REQUIREMENTS OF THE "AAMA" STANDARDS IN ADDITION TO THE MANUFACTURER SPECIFICATIONS AND ARCHITECTURAL DETAILS INCLUDED WITHIN THE DRAWINGS.

40. ROOFING REQUIREMENTS
ROOFING WORK SHALL BE PERFORMED AND ALL PENETRATIONS THROUGH THE ROOFING MEMBRANE SHALL BE PATCHED OR FLASHED AS PER THE MANUFACTURER'S STANDARDS.

41. ROOF ACCESS
ROOF OBSTRUCTIONS SUCH AS TELEVISION ANTENNAE, SOLAR PANELS, AND GUY WIRES SHALL NOT BE LOCATED OR INSTALLED IN SUCH A WAY AS TO PREVENT FIRE DEPARTMENT ACCESS OR EGRESS IN THE EVENT OF A FIRE.

42 FINISH FLAME SPREAD REQUIREMENTS
INTERIOR WALL AND CEILING FINISHES SHALL NOT EXCEED FLAME SPREAD CLASSIFICATIONS DICTATED BY ALL APPLICABLE BUILDING CODES.

43. GYPSUM REQUIREMENTS
GYPSUM BOARD AND SUSPENDED CEILING SYSTEMS SHALL CONFORM TO ALL LOCAL GOVERNING BUILDING CODES AND ORDINANCES.

44. EQUIPMENT IN STRUCTURAL SLAB
PIPES, CONDUITS, OR DUCTS EXCEEDING ONE THIRD OF THE SLAB OR MEMBER THICKNESS SHALL NOT BE PLACED IN STRUCTURAL CONCRETE UNLESS SPECIFICALLY DETAILED. REFER TO MECHANICAL, ELECTRICAL, PLUMBING, AND STRUCTURAL DRAWINGS FOR LOCATION OF SLEEVES AND OTHER ACCESSORIES.

45. FIRE EXTINGUISHERS
VERIFY FIRE EXTINGUISHER REQUIREMENTS AND LOCATIONS WITH FIRE MARSHAL AND OWNER'S REPRESENTATIVE.

46. INSECT CONTROL
CONTRACTOR SHALL SEAL ALL GAPS, HOLES, AND CRACKS IN BUILDING CONSTRUCTION AS REQUIRED TO CONTROL INFILTRATION OF INSECTS.

47. DISPOSAL OF TRASH AND EXCESS EXCAVATION
DISPOSE OF TRASH, AND DEBRIS AT DESIGNATED AREAS OFF THE PREMISES AT NO ADDITIONAL COST TO THE OWNER. BURNING OF TRASH AND DEBRIS ON THE PREMISES IS PROHIBITED. COORDINATE TRASH REMOVAL WITH LANDLORD WHERE APPLICABLE.

48. COORDINATION
ELECTRICAL, MECHANICAL, AND PLUMBING SYSTEM ARE SCHEMATIC ONLY. THE CONTRACTOR IS RESPONSIBLE TO COORDINATE ALL WORK TO AVOID CONFLICTS BETWEEN TRADES. THE CONTRACTOR SHALL PERFORM ALL WORK TO PROVIDE COMPLETE FUNCTIONING SYSTEMS IN ACCORDANCE WITH THE INTENT INDICATED AND CODES AND REQUIREMENTS OF ALL AGENCIES HAVING JURISDICTION.

49. CLEANING MATERIALS AND EQUIPMENT
PROVIDE ALL REQUIRED PERSONNEL, EQUIPMENT, AND MATERIALS NEEDED TO MAINTAIN THE SPECIFIED STANDARD OF CLEANLINESS. USE ONLY THE CLEANING MATERIALS AND EQUIPMENT WHICH ARE COMPATIBLE WITH THE SURFACE BEING CLEANED, AS RECOMMENDED BY THE MANUFACTURER OF THE MATERIAL.

50. LOADS ON STRUCTURE
DURING AND AFTER CONSTRUCTION THE CONTRACTOR AND / OR OWNER SHALL KEEP LOADS ON THE STRUCTURE WITHIN THE LIMITS OF THE DESIGN LOAD.

51. FIRE RATED ASSEMBLIES
RATED ASSEMBLIES SHALL BE CONTINUOUS BOTH HORIZONTALLY AND VERTICALLY AND SHALL EXTEND FROM RATED ASSEMBLY TO RATED ASSEMBLY. FIRE CAULK ALL PENETRATIONS.

TOLERANCES

1. TOLERANCES AND ALLOWABLE DEVIATIONS
INSTALL WORK TRUE TO LINE, PLUMB, AND LEVEL. EXCEPT WHERE SPECIFIED OTHERWISE, WORK EXECUTED WITHIN THE FOLLOWING TOLERANCE WILL BE ACCEPTABLE.
a. TRUE TO LINE:
ALLOWED DEVIATION FROM AN ABSOLUTELY STRAIGHT LINE OF SIGHT WITHIN PLUS OR MINUS 1/8 INCH IN 10 FT. AND WITHIN PLUS OR MINUS ¼ INCH FOR ENTIRE LENGTH OF A PARTICULAR ELEMENT OF CONSTRUCTION OVER 20'-0" IN LENGTH.
b. PLUMB:
ALLOWED DEVIATIONS FROM AN ABSOLUTELY VERTICAL PLANE OF PLUS OR MINUS 1/8 INCH IN 10 FT. AND WITHIN PLUS OR MINUS ¼ INCH FOR ENTIRE LENGTH OF A PARTICULAR ELEMENT OF CONSTRUCTION OVER 20'-0" IN LENGTH.
c. LEVEL:
ALLOWED DEVIATIONS FROM AN ABSOLUTELY HORIZONTAL PLANE OF PLUS OR MINUS 1/8 INCH IN 10 FT. AND WITHIN PLUS OR MINUS ¼ INCH FOR ENTIRE LENGTH OF A PARTICULAR ELEMENT OF CONSTRUCTION OVER 20'-0" IN LENGTH.
d. ALLOWED DEVIATIONS FROM AN ABSOLUTELY FLAT IF WITHIN PLUS OR MINUS 1/16 INCH IN ONE SQUARE FOOT, WITHIN PLUS OR MINUS 1/8 INCH IN AN AREA 10 FEET BY 10 FEET, AND WITHIN PLUS OR MINUS ¼ INCH FOR ENTIRE AREA OF A PARTICULAR ELEMENT OF CONSTRUCTION OVER 20'-0" IN LENGTH.

PROJECT CONTRACT CLOSEOUT

1. SUBSTANTIAL COMPLETION
AT SUBSTANTIAL COMPLETION OF THE PROJECT, SCHEDULE AND ATTEND A PUNCH LIST WALK THROUGH OF REMAINING WORK FOR REVIEW WITH THE ARCHITECT AND OWNER. COMPLETE ALL DEFECTS AND OMISSIONS NOTED IN THE FINAL PUNCHLIST PROMPTLY, IN THE TIME PERIOD AGREED UPON WITH THE OWNER, AT NO ADDITIONAL EXPENSE TO THE OWNER.

2. CERTIFICATE OF OCCUPANCY
PROVIDE THE FINAL CERTIFICATE OF OCCUPANCY FROM THE BUILDING DEPARTMENT.

3. PERMITS/INSPECTION CARDS
FURNISH COPIES OF PERMITS AND SIGNED INSPECTION CARDS FOR EACH OF THE FOLLOWING AGENCIES: BUILDING DEPARTMENT; PLUMBING/MECHANICAL DEPARTMENT; ELECTRICAL DEPARTMENT; FIRE DEPARTMENT; HEALTH DEPARTMENT; OTHERS AS REQUIRED.

4. MAINTENANCE MANUALS AND WARRANTIES
FURNISH (2) COPIES FOR EACH UNIT OF ALL MANUALS, MAINTENANCE INSTRUCTIONS, CONTRACTORS AND MANUFACTURER'S PRINTED WARRANTIES, AND INSTRUCTIONS FOR OPERATION OF ALL EQUIPMENT SPECIFIED HEREIN OR SHOWN ON DRAWINGS, TRAIN OWNER'S PERSONNEL IN USE OF BUILDING SYSTEMS.

5. TOUCH-UP MATERIAL
FURNISH OWNER WITH ONE GALLON OF EACH PAINT AND STAIN USED PER UNIT. PROVIDE AN ADDITIONAL 2 PERCENT OF QUANTITY INSTALLED OF ALL FINISH MATERIAL INCLUDING CEILING PANELS, TILE, AND SHEET GOODS.

6. SUBCONTRACTORS
PROVIDE THE OWNER THE NAMES, ADDRESSES, AND PHONE NUMBERS OF ALL SUBCONTRACTORS, FINAL UNCONDITIONAL LIEN RELEASES, AND WARRANTIES FROM EACH.

7. FINAL CLEANING AND REPAIRS
REMOVE TEMPORARY FACILITIES AND PROVIDE FINAL CLEANING AND TOUCH-UP. RESTORE PORTIONS OF BUILDING, SITE IMPROVEMENTS, LANDSCAPING AND OTHER ITEMS DAMAGED BY CONSTRUCTION OPERATIONS TO THE SATISFACTION OF THE ARCHITECT, AT NO ADDITIONAL EXPENSE TO THE OWNER.

8. CLOSEOUT DOCUMENTS
PROVIDE THE OWNER WITH A COMPACT DISK OF ALL RECORD DRAWINGS IN PDF FORMAT, COPY OF ALL SHOP DRAWINGS AND PRODUCT SUBMITTALS, SERVICE CONTRACTS, HVAC AIR BALANCE REPORT, AND WASTELINE VIDEO INSPECTION REPORT.

LEGEND OF ABBREVIATIONS

AB	ANCHOR BOLT(S)
ABV	ABOVE
APPROX	APPROX
ARCH	ARCHITECT(URAL)
BLDG	BUILDING
BLK	BLOCKING
BLW	BELOW
BM-X	BEAM
B.N.	BOUNDARY NAILING
BOT	BOTTOM
BRG	BEARING
BTWN	BETWEEN
C.J.	CONST/CONTROL JOINT
CLR	CLEAR
COL	COLUMN
CONC	CONCRETE
CONT	CONTINUOUS
CTR	CENTER
CW-X	CONCRETE WALL
DBL	DOUBLE
DIA	DIAMETER
DIM	DIMENSION
DN	DOWN
DWG	DRAWING
EA	EACH
E.F.	EACH FACE
E.J.	EXPANSION JOINT
ELEC	ELECTRICAL
ELEV	ELEVATION
EQ	EQUAL
E.W.	EACH WAY
EXIST	EXISTING
EXP	EXPANSION
EXT	EXTERIOR
FC-X	CONTINUOUS FOOTING
FDN	FOUNDATION
FIN	FINISH(ED)
FLR	FLOOR
FR-X	RECTANGULAR FOOTING
FS-X	SQUARE FOOTING
FT	FEET
FTG	FOOTING
HORIZ	HORIZONTAL
HT	HEIGHT
I.F.	INTERIOR FACE
IN.	INCHES
INT	INTERIOR
JT	JOINT
JST	JOIST
K	KIPS
KLF	KIP PER FOOT
KSF	KIP PER SQUARE FOOT
LBS	POUNDS
LF	LINEAL FOOT
MAX	MAXIMUM
MECH	MECHANICAL
MFR	MANUFACTURER
MIN	MINIMUM
MISC	MISCELLANEOUS
MTL	METAL
NTS	NOT TO SCALE
O.C.	ON CENTER
O.F.	OUTSIDE FACE
OPP	OPPOSITE
PCF	POUNDS PER CUBIC FT
PERP	PERPENDICULAR
PLF	POUNDS PER LINEAL FT
PSI	POUNDS PER SQ INCH
PSF	POUNDS PER SQ FOOT
REINF	REINFORCEMENT
REQ'D	REQUIRED
SBP-X	STEEL BASE PLATE
SC-X	STEEL COLUMN
SCP-X	STEEL CAP PLATE
SI	SPECIAL INSPECTION
SIM	SIMILAR
SOG	SLAB ON GRADE
SQ	SQ SQUARE
SW-X	SW-X SHEAR WALL
T&B	TOP AND BOTTOM
TEMP	TEMPERATURE
T.O.	TOP OF
TOF	TOP OF FOOTING
TOW	TOP OF WALL
TYP	TYPICAL
UNO	UNLESS NOTED OTHERWISE
VERT	VERTICAL
w/	WITH
WF	WIDE FLANGE
WWF	WELDED WIRE FABRIC
WWM	WELDED WIRE MESH

SYMBOLS LEGEND

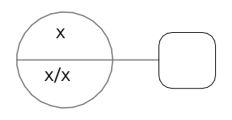	= DETAILS CALL-OUTS TAGS
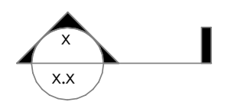	= SECTION CUTS TAGS
	= DOOR TAGS (SEE SHEET A601)
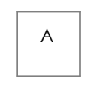	= STOREFRONT/CURTAINWALL WALL TAGS (SEE SHEET A602 & A603)
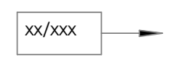	= KEYNOTE TAGS (SEE A101)
	= ROOM NUMBER
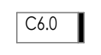	= WALL TYPE TAGS; SEE WALL TYPES (SEE SHEET G010) "C" = WALL TYPE "6" = STUD SIZE "0" = FIRE RATING IN HOURS

aeurbia
architects and engineers
909 West South Jordan Parkway
south jordan, utah 84095
phone: 801.746.0456 - fax: 801.575.6456
webpage: aeurbia.com

174600
JAMES MICHAEL WILLIAMS
12/2/2022 6:03:19 PM

VELOCIRAX TI
LEHI BUSINESS PARK
850 EAST MILL POND DRIVE LEHI, UTAH

Revision Schedule

MARK	DESCRIPTION	Revision Date

AE2021.415

GENERAL NOTES & LEGENDS

DATE: **PROJECT ISSUE DATE**

SHEET #:

G002

PROJECT STATUS

12/2/2022 6:03:19 PM

VELOCIRAX – TENANT IMPROVEMENT
PINE VALLEY IND. PARK BLDG 2
2012 IBC CODE ANALYSIS

Code Item Reference	Code Requirement	Actual Building	Comments
Occupancy Chapter 3	Bldg.: B/S-1/S-2/F-1/F-2/M	Bldg.: B/S-1/S-2/F-1/F-2/M **TI: B, S-1, S-2, F-1, F-1, M**	Office, Warehouse, Industrial TI: Bike Shop
Construction Type Chapter 6	III-B	III-B	**Existing Building** **New Tenant Improvement**
Allowable Height Table 504.3	55'	33'	Ok
Allowable Stories Table 504.4	2	1 + mezzanine	Ok
Allowable Area Section 507.4	48,000 SF	40,230 SF **TI: 6,110 SF – level 1** **TI: 1,234 SF - mezzanine**	Ok Ok Ok
Frontage Increase 506.3	NA	NA	NA
Mixed Use Section 508	NA	NA	Non-separated use per 508.3
Max. Area of Ext. Wall Unprotected openings Table 705.8	No Limit	No Limit	Ok
Automatic Sprinkler Systems Section 903	Yes	Yes	**NFPA 13, ESFR (verify) –** **Modify as req'd for TI**
Max. Floor Area Allowances per Occupant, Table 1004.1.2	Load Factors: 15 Conference room 15 Break room 150 Office areas 60 Bike Shop / Retail 500 Warehouse	**Tenant Improvement:** **225/15 = 15** **138/15 = 10** **871/150 = 6** **1,313/60 = 22** **4,797/500 = 10** **Total: 63 occupants**	**Tenant Improvement:** **Conference room – mezzanine** **Break room – mezzanine** **Office areas – mezzanine** **Office areas – level 1** **Warehouse – level 1** **Total occupant load**
Min. Number of Exits; Table 1006.2.1 and 1006.3.1	Bldg.: 2 TI mezzanine: 1 TI level 1: 2	Bldg.: 15 TI mezzanine: 1 TI level 1: 4	Ok Ok Ok
Common Path Table 1006.2.1	B: 100' S: 100' F: 100' M: 75'	Less than maximum See plan	
Exit Access Travel Table 1017.2	w/ Sprinkler: S-1, F-1: 250' S-2, F-2: 400' B: 300' M: 250'	Less than maximum See plan	
Accessibility	Chapter 11		
Ventilation, Temperature, Lighting	Chapter 12 and Mechanical code		
Min. Roofing Class. Table 1505.1	C	C	
Plumbing Facilities Table 2902.1 Water Closets Lavatories Drinking Fountain Service Sink	Tenant Improvement: 1M 1W 1M 1W 1 high + 1 low 1	Tenant Improvement: 1M 1W 1M 1W 1 high + 1 low 1	B/S or F uno 1:25 first 50,1:50 / 1:100 1:40 first 80,1:80 / 1:100 1:100 / 1:1,000 (1:400 F occ) 1/1
Fire Extinguishers			Per Fire Marshal
Energy Efficiency	Chapter 13	Ok	

Note: Building area is approximate and portrays gross building area for code compliance only. Additional area plans can be provided at the request of the owner for BOMA calculations, etc. Contractor shall be responsible for determining building areas for bidding purposes.

FIRE-RESISTANCE RATING REQUIREMENTS (hours)

Building Element	Type III-B
Structural Frame Including Columns, Girders, Trusses	0
Bearing Walls Exterior Interior	2-hr 0
Nonbearing Walls and Partitions Exterior Interior	0 0
Floor Construction Including supporting Beams and Joists	0
Roof Construction Including supporting Beams and Joists	0

Corridor fire-resistance rating = 0 hr per table 1020.1

INTERIOR WALL AND CEILING FINISH REQUIREMENTS

Sprinkled	Group S,F	Group B,M
Exit enclosures and exit passageways	C	B
Corridors	C	C
Rooms and enclosed spaces	C	C

See Table 803.13
Class A flame spread 0-25; Smoke developed 0-450
Class B flame spread 26-75; Smoke developed 0-450
Class C flame spread 76-200; Smoke developed 0-450

aeurbia architects and engineers
909 West South Jordan Parkway
south jordan, utah 84095
phone: 801.746.0456 - fax: 801.575.6456
webpage: aeurbia.com

LICENSED ARCHITECT 174600 JAMES MICHAEL WALKER STATE OF UTAH
12/2/2022 6:03:19 PM

VELOCIRAX TI
LEHI BUSINESS PARK
850 EAST MILL POND DRIVE LEHI, UTAH

Revision Schedule

MARK	DESCRIPTION	Revision Date

AE2021.415

CODE ANALYSIS

DATE: **PROJECT ISSUE DATE**

SHEET #:

G003

PROJECT STATUS

12/2/2022 6:03:19 PM

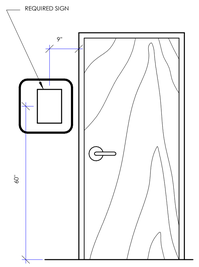

SINGLE DOOR

N.T.S.

7 G004 **RESTROOM SIGN**

1/2" = 1'-0"

LETTERS AND NUMBER:
1. CHARACTER WIDTH TO BE 55-110% OF THE CHARACTER HEIGHT. STROKE THICKNESS TO BE 10-15% OF CHARACTER HEIGHT.
2. CONTRAST CHARACTERS AND SYMBOLS WITH BACKGROUND. CHARACTERS ARE TO BE SANS SERIF FONT.
3. SEE DETAIL BELOW FOR SIGN LAYOUT.

SIGNS / PICTOGRAMS:
4. PICTOGRAMS / PICTORIAL SYMBOL SIGNS SHALL BE ACCOMPANIED BY THE EQUIVALENT VERBAL DESCRIPTION PLACED DIRECTLY BELOW THE PICTOGRAM. THE BORDER DIMENSION SHALL BE 6" MINIMUM HEIGHT.
5. CHARACTERS AND BACKGROUNDS SHALL BE OF NON-GLARE CONTRASTING COLORS.
6. SIGNS / PICTOGRAMS SHALL BE INSTALLED ON THE WALL ADJACENT TO DOOR LEADING TO THE ROOM OR SPACE THEY DESCRIBE AND AT 60" AFF TO SIGN CENTERLINE AND WHERE A PERSON MAY APPROACH WITHIN 3" OF SIGNAGE WITHOUT ENCOUNTERING PROTRUDING OBJECTS OR STANDING WITHIN THE DOOR SWING AREA.
7. VERTICAL CLEARANCE AT SUSPENDED SIGNS WITH MINIMUM HEADROOM OF 80" REQUIRE MINIMUM 3" CHARACTER HEIGHT MEASURED BY USING UPPERCASE "X". CHARACTERS AND NUMBERS SHALL BE SIZED ACCORDING TO VIEWING DISTANCE FROM WHICH READ. LOWER CASE CHARACTERS PERMITTED.

SIGN LOCATIONS:
8. ALL ACCESSIBLE ENTRANCES IDENTIFIED WITH MINIMUM OF ONE STANDARD SIGN.
9. ADDITIONAL DIRECTIONAL SIGNS ALONG ACCESSIBLE PATH OF TRAVEL ARE REQUIRED.
10. BUILDING REMODELED TO PROVIDE ACCESSIBLE SANITARY FACILITIES FOR PUBLIC USE SHALL HAVE INFORMATION POSTED IN THE LOBBY AS PART OF THE BUILDING DIRECTORY.

INTERNATIONAL SYMBOL OF ACCESSIBILITY:
11. STANDARD USED TO IDENTIFY ACCESSIBLE FACILITIES.
12. WHITE FIGURE ON BLUE BACKGROUND, COLOR 15090 ON FEDERAL STANDARD 595A.
13. WHEN ENFORCING AGENCY DETERMINES, IF APPROPRIATE, SPECIAL DESIGNS AND COLORS MAY BE APPROVED.

BRAILLE:
14. USE CONTRASTED GRADE 2 BRAILLE.
15. SEE DETAIL BELOW FOR SPACING & SIZE
16. DOTS TO BE RAISED MINIMUM 0.025 INCH ABOVE BACKGROUND.

DOOR TYPE:
1. MINIMUM 10" HIGH SMOOTH SURFACE AT DOOR BOTTOM. EITHER ATTACHED PANEL OR BOTTOM RAIL.

HARDWARE:
2. OPEN FROM INSIDE WITHOUT USE OF KEY OR SPECIAL KNOWLEDGE OR EFFORT.
3. OPEN BY SINGLE EFFORT LEVER-TYPE DEVICE (NOT REQUIRING GRASPING).
4. MOUNTED 36" TO 42".
5. MAXIMUM 8.5 LBS EFFORT TO OPERATE EXTERIOR DOOR. 5 LBS FOR INTERIOR.

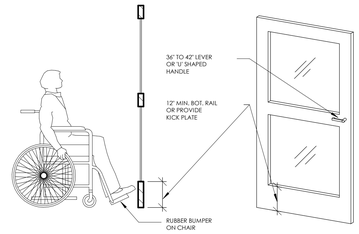

1 G004 **ADA DOOR REQUIREMENTS**

1/2" = 1'-0"

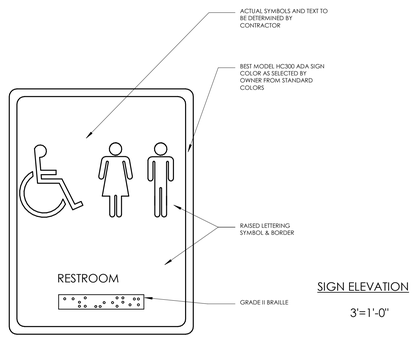

SIGN ELEVATION

3"=1'-0"

8 G004 **REQUIRED SIGN**

6" = 1'-0"

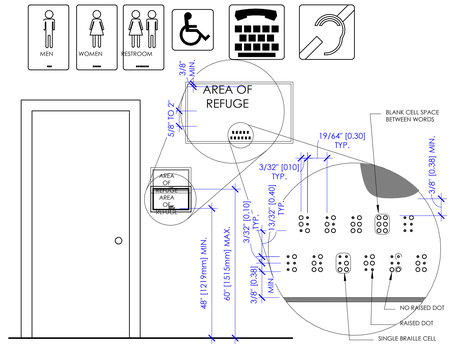

5 G004 **TYPICAL SIGNAGE DIMENSIONS & LAYOUT**

1/2" = 1'-0"

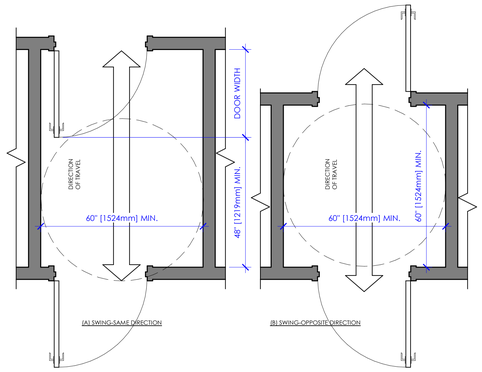

2 G004 **CLEARANCES FOR DOORS IN SERIES**

1/2" = 1'-0"

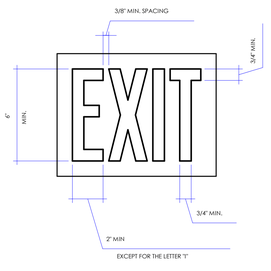

NOTES:
1. PROVIDE INTERNALLY LIT SIGN POWERED BY EMERGENCY POWER SYSTEM.
2. SIGN TO REMAIN ILLUMINATED AT ALL TIMES.

9 G004 **EXIT SIGN DETAIL**

3" = 1'-0"

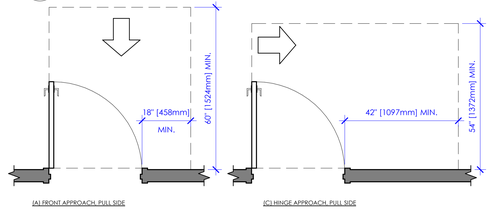

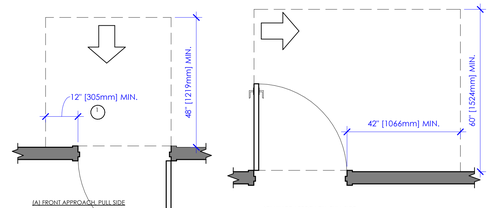

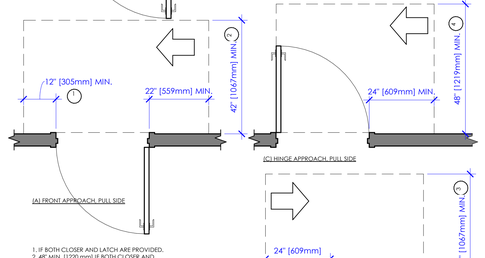

1. IF BOTH CLOSER AND LATCH ARE PROVIDED.
2. 48" MIN. [1220 mm] IF BOTH CLOSER AND LATCH ARE PROVIDED.
3. 48" MIN. [1220mm] IF CLOSER IS PROVIDED.
4. 54" MIN. [1370mm] IF CLOSER IS PROVIDED.

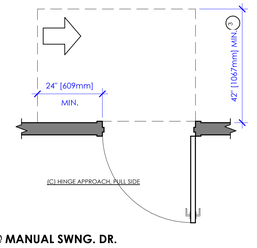

6 G004 **MANEUVERING CLEARANCES @ MANUAL SWNG. DR.**

1/2" = 1'-0"

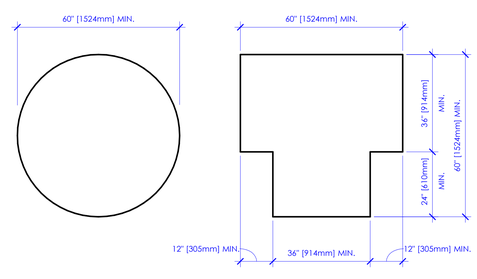

3 G004 **TURNING FLOOR CLEARANCES**

1/2" = 1'-0"

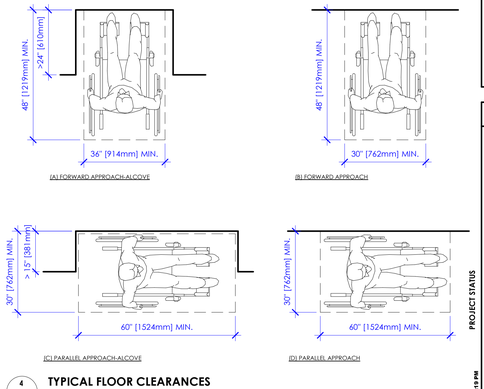

4 G004 **TYPICAL FLOOR CLEARANCES**

1/2" = 1'-0"

aeurbia architects and engineers
909 West South Jordan Parkway
south jordan, utah 84095
phone: 801.746.0456 - fax: 801.575.6456
webpage: aeurbia.com

LICENSED ARCHITECT 174600 JAMES MICHAEL WALKER STATE OF UTAH

12/2/2022 6:03:19 PM

VELOCIRAX TI
LEHI BUSINESS PARK
850 EAST MILL POND DRIVE LEHI, UTAH

Revision Schedule

MARK	DESCRIPTION	Revision Date

AE2021.415

ADA GENERAL NOTES AND DETAILS

DATE: **PROJECT ISSUE DATE**

SHEET #:

G004

PROJECT STATUS

12/2/2022 6:03:19 PM

FILE URBIA JOBS\2021\AE2021.415 - SHRE HORAM - Velocirax TI - Lehi Business Park\1. Architecture\VELOCIRAX TI.rvt

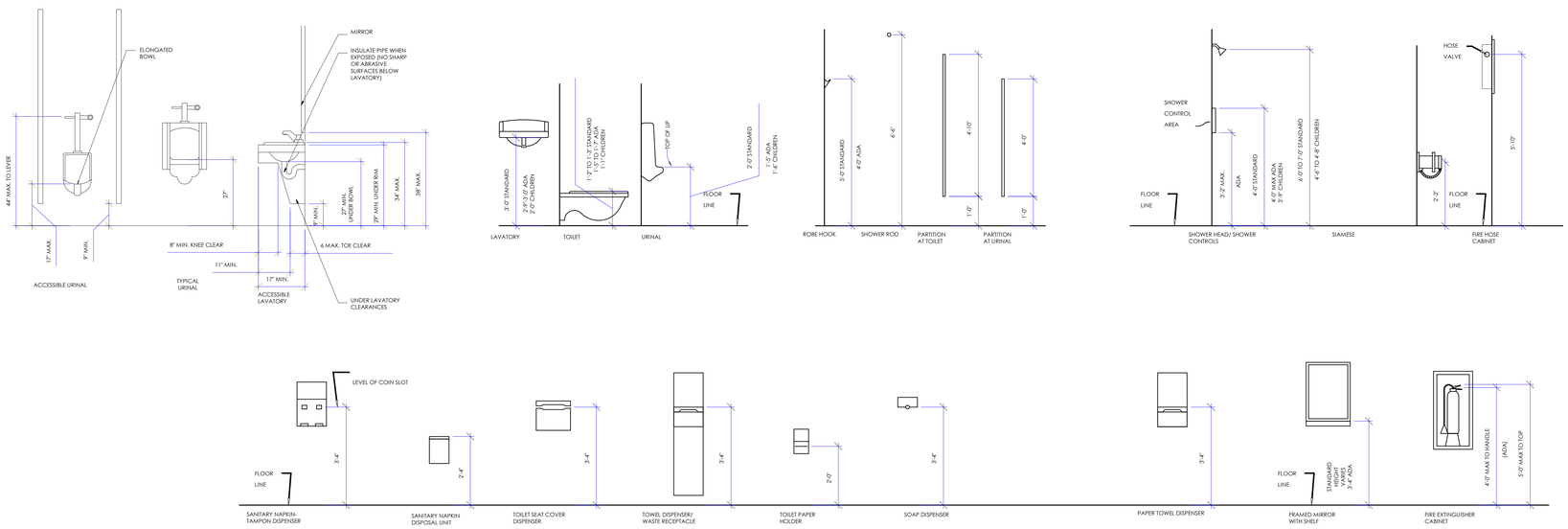

4 G005 **MOUNTING HEIGHTS DETAIL**

1/2" = 1'-0"

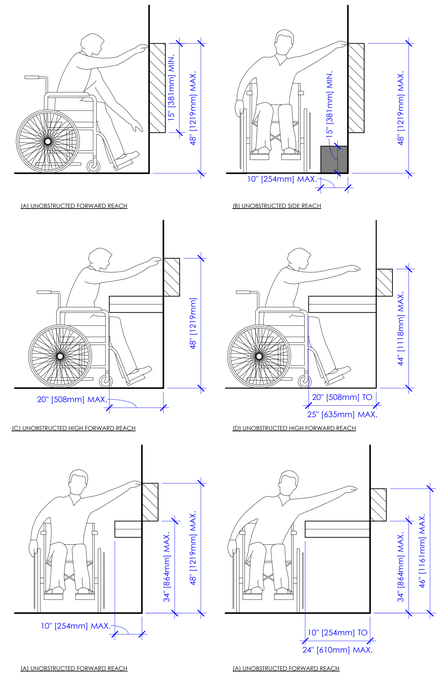

1 G005 **REACH REQUIREMENTS FOR WHEEL CHAIR ACCESS**

1/2" = 1'-0"

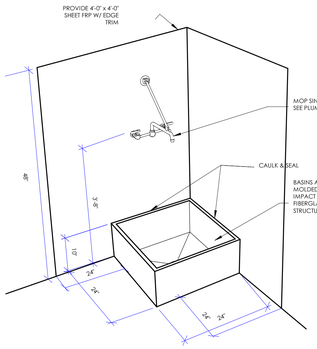

7 G005 **UTILITY SINK**

1/2" = 1'-0"

NOTE:
TOILET PAPER DISPENSERS SHALL COMPLY WITH SECTION 309.4. WHERE THE DISPENSER IS LOCATED BELOW THE GRAB BAR, THE OUTLET OF THE DISPENSER SHALL BE LOCATED WITHIN AN AREA 24" (610mm) MINIMUM AND 42" (1067mm) MAXIMUM FROM THE REAR WALL. THE OUTLET OF THE DISPENSER SHALL BE LOCATED 18" (455mm) MINIMUM AND 48" (1220mm) MAXIMUM ABOVE THE FLOOR. DISPENSER SHALL COMPLY WITH SECTION 609.3. DISPENSERS SHALL NOT BE OF A TYPE THAT CONTROL DELIVERY, OR DO NOT ALLOW CONTINUOUS PAPER FLOW.

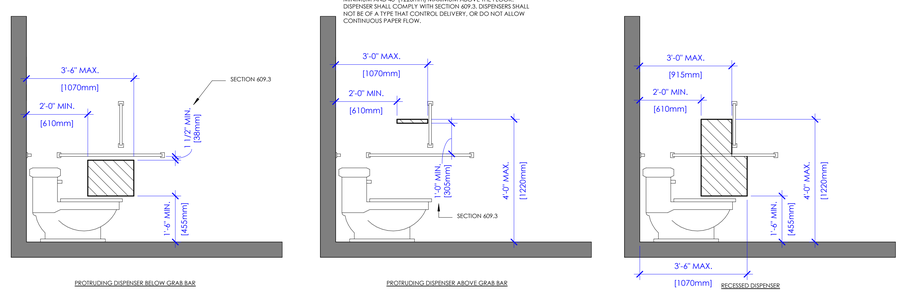

5 G005 **TOILET ROOM GRAB BAR HEIGHTS**

1/2" = 1'-0"

NOTE:
GRAB BARS TO CONFORM WITH ANSI A117.1. GRAB BARS FOR WATER CLOSETS SHALL COMPLY WITH SECTION 609 AND SHALL BE PROVIDED IN ACCORDANCE WITH SECTIONS 604.5.1 AND 604.5.2. GRAB BARS SHALL BE PROVIDED ON REAR WALL AND SIDE WALL CLOSET TO THE WATER CLOSET.

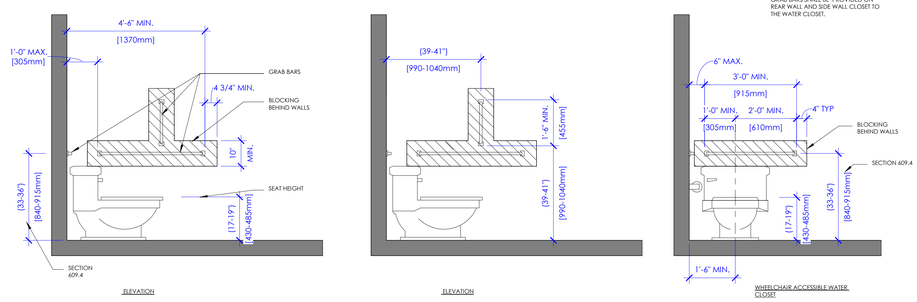

6 G005 **TOILET ROOM GRAB BAR HEIGHTS**

1/2" = 1'-0"

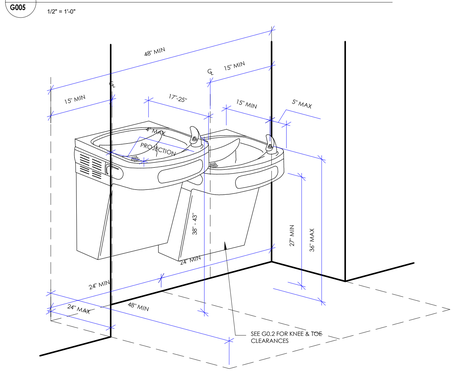

2 G005 **TOE/KNEE CLEARANCES**

1/2" = 1'-0"

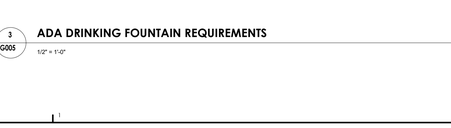

NOTE: DRINKING FOUNTAINS TO BE PROVIDED WITH TENANT IMPROVEMENT.

3 G005 **ADA DRINKING FOUNTAIN REQUIREMENTS**

1/2" = 1'-0"

aeurbia architects and engineers
909 West South Jordan Parkway
South Jordan, Utah 84095
phone: 801.746.0456 - fax: 801.575.6456
webpage: aeurbia.com

LICENSED ARCHITECT 174600 JAMES MICHAEL STATE OF UTAH

12/2/2022 6:03:20 PM

VELOCIRAX TI
LEHI BUSINESS PARK
850 EAST MILL POND DRIVE LEHI, UTAH

Revision Schedule		
MARK	DESCRIPTION	Revision Date

AE2021.415

ADA GENERAL NOTES AND DETAILS

DATE: **PROJECT ISSUE DATE**

PROJECT STATUS

SHEET #:

G005

12/2/2022 6:03:20 PM

FILE: URBIA-JOBS-2021\AE2021.415 - MINK HOMAN - Velocirax TI - Lehi Business Park\Architecture\VELOCIRAX TI.rvt

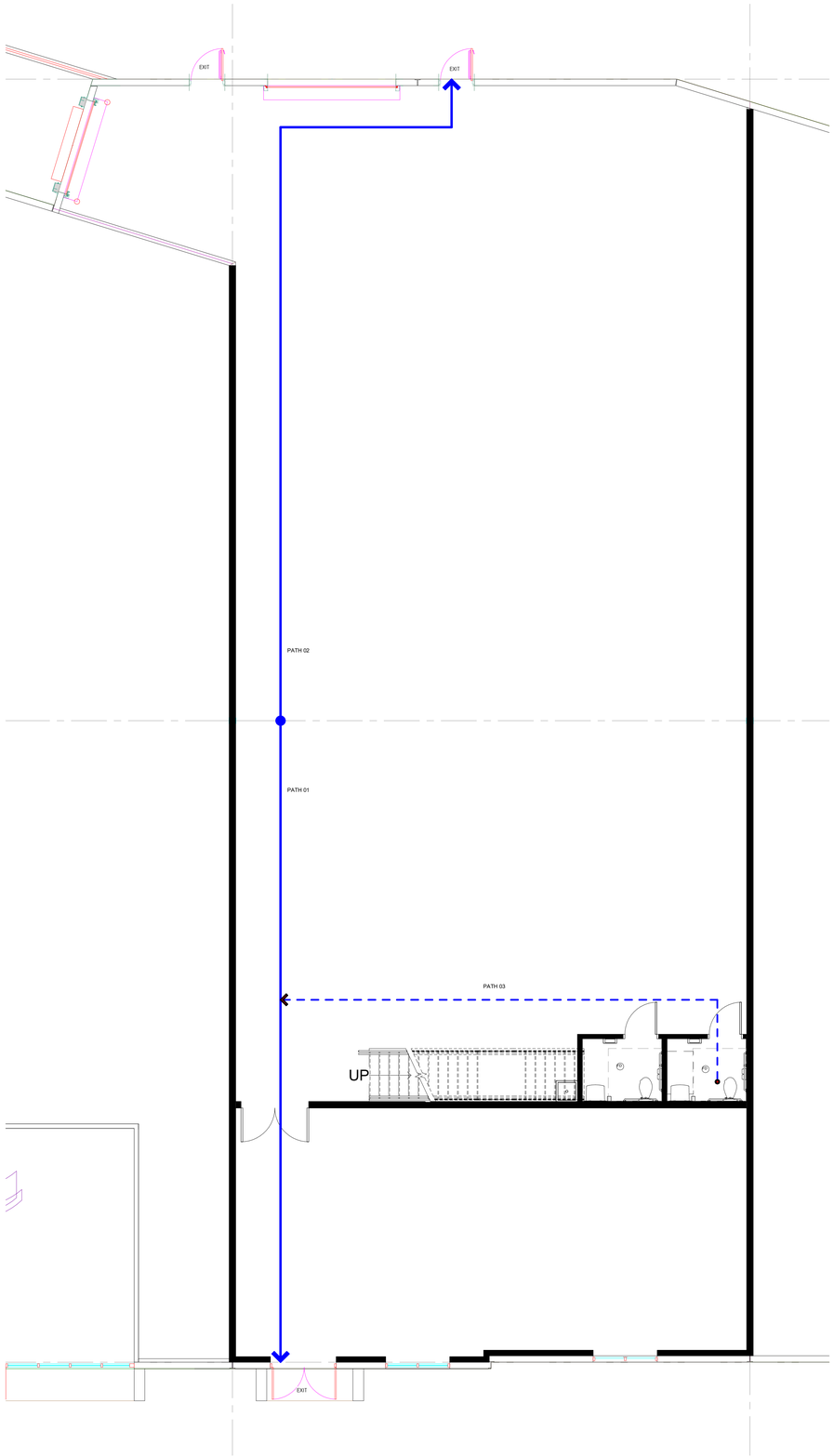

1 G006 **LEVEL 1 - EGRESS PLAN**

3/16" = 1'-0"

0 4' 8' 12'
GRAPHIC SCALE

NORTH

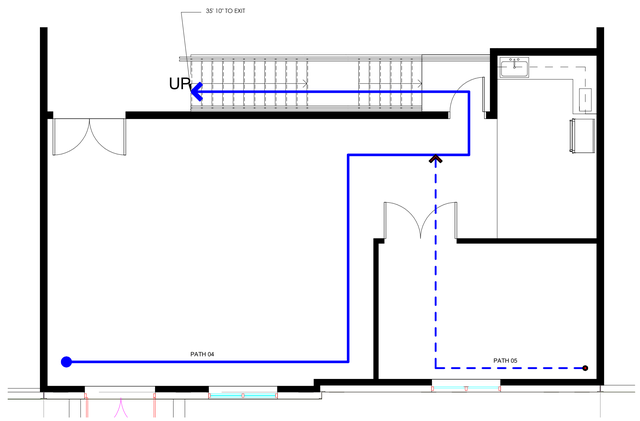

2 G006 **LEVEL 2 - EGRESS PLAN**

3/16" = 1'-0"

0 4' 8' 12'
GRAPHIC SCALE

NORTH

LEGEND:

= COMMON PATH OF EGRESS

= EXIT ACCESS TRAVEL

EXIT = EXIT LOCATION SEE ELECTRICAL PLANS FOR LOCATION OF EXIT SIGNAGE

= FIRE EXTINGUISHER

FE = OCCUPANCY TAG

XX

EGRESS PATHS

Travel Path	Common Path Length	Total Travel Distance
PATH 01	0"	60'-0"
PATH 02	0"	76'-0"
PATH 03	48'-6"	48'-6"
PATH 04	0"	82'-8"
PATH 05	31'-6"	31'-6"

KEY PLAN

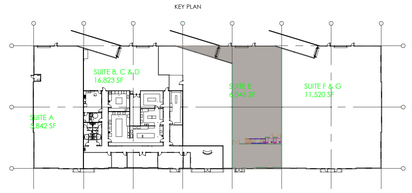

aeurbia
architects and engineers
909 West South Jordan Parkway
south jordan, utah 84095
phone: 801.746.0456 - fax: 801.575.6456
webpage: aeurbia.com

LICENSED ARCHITECT
174600
JAMES MICHAEL WALKER
STATE OF UTAH

12/2/2022 6:03:20 PM

VELOCIRAX TI

LEHI BUSINESS PARK

850 EAST MILL POND DRIVE LEHI, UTAH

Revision Schedule

MARK	DESCRIPTION	Revision Date

AE2021.415

EGRESS PLAN

DATE: **PROJECT ISSUE DATE**

SHEET #:

G006

PROJECT STATUS

12/2/2022 6:03:20 PM

F:\AE URBIA JOBS\2021\AE2021.415 - MINE HOMAN - Velocirax TI - Lehi Business Park\Architectural\VELOCIRAX TI.rvt

FIRE RATING		NON-RATED
* STUD WIDTH	FS0-4	3-5/8" METAL STUD

TOTAL R-VALUE OF WALL ASSEMBLY WITH WALL TYPE A = R-14

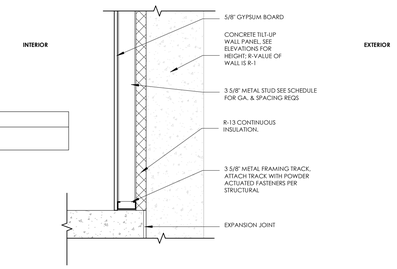

C3 / G007 **FS0 WALL DETAIL- 3-5/8" METAL STUD EXTERIOR FURRING**

1" = 1'-0"

FIRE RATING		NON-RATED
* STUD WIDTH	NS0-4	3-5/8" METAL STUD
	NS0-6	6" METAL STUD

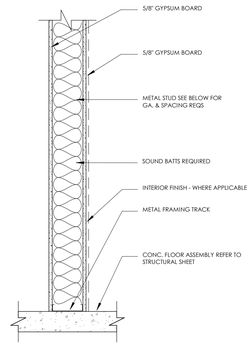

B3 / G007 **NS0 WALL DETAIL - METAL STUD INTERIOR PARTITION**

1" = 1'-0"

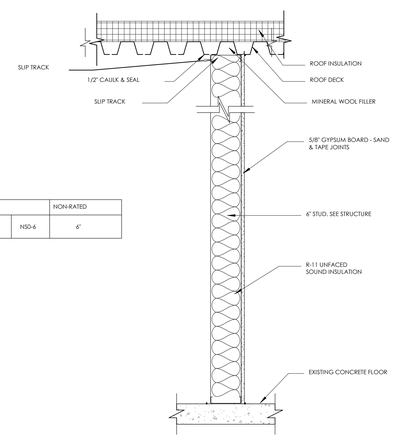

FIRE RATING		NON-RATED
* STUD WIDTH	NSO-6	6"

2 / G007 **NSO-6 TO ROOF/DECK ONLY - DEMISING WALL SECTION - GYP TENANT SIDE ONLY**

1" = 1'-0"

METAL STUD WALL FRAMING

STUD WIDTH		3-5/8"
FIRE RATING		NON-RATED
* STUD GAUGE & SPACING REQ.	1	3-5/8" X 20 GA. STEEL STUDS AT 24" O.C. (MAX HT. 17'-4")
	2	3-5/8" X 16 GA. STEEL STUDS AT 24" O.C. (MAX HT. 22'-10")
	3	3-5/8" X 20 GA. STEEL STUDS AT 16" O.C. (MAX HT. 21'-3")
	4	3-5/8" X 18 GA. STEEL STUDS AT 16" O.C. (MAX HT. 24'-5")
STC: N/A		
	WALL DESCRIPTION:	INTERIOR WALL

STUD WIDTH		6"
FIRE RATING		NON-RATED
* STUD GAUGE & SPACING REQ.	1	6" X 20 GA. STEEL STUDS AT 24" O.C. (MAX HT. 23'-4")
	2	6" X 16 GA. STEEL STUDS AT 24" O.C. (MAX HT. 34'-2")
	3	6" X 14 GA. STEEL STUDS AT 24" O.C. (MAX HT. 36'-7")
	4	6" X 20 GA. STEEL STUDS AT 16" O.C. (MAX HT. 28'-7")
	5	6" X 18 GA. STEEL STUDS AT 16" O.C. (MAX HT. 34'-5")
STC: N/A	6	6" X 18 GA. STEEL STUDS AT 12" O.C. (MAX HT. 39'-8")
	WALL DESCRIPTION:	INTERIOR WALL

STUD WIDTH		6"
FIRE RATING		1 HOUR
* STUD GAUGE & SPACING REQ.	1	6" X 20 GA. STEEL STUDS AT 24" O.C. (MAX HT. 23'-4")
	2	6" X 16 GA. STEEL STUDS AT 24" O.C. (MAX HT. 34'-2")
	3	6" X 14 GA. STEEL STUDS AT 24" O.C. (MAX HT. 36'-7")
STC:	4	6" X 20 GA. STEEL STUDS AT 16" O.C. (MAX HT. 28'-7")
	WALL DESCRIPTION:	FULL HEIGHT 1 HOUR FIRE RATED INTERIOR WALL

METAL STUD CEILING FRAMING - L/360 & 1.25" FLANGES

STUD WIDTH			3-5/8"
* STUD GAUGE & SPACING REQ.	UNSUPPORTED	1	3-5/8" X 20 GA. STEEL STUDS AT 24" O.C. (MAX SPAN 8'-5")
		2	3-5/8" X 18 GA. STEEL STUDS AT 24" O.C. (MAX SPAN 9'-3")
		3	3-5/8" X 20 GA. STEEL STUDS AT 16" O.C. (MAX SPAN 9'-5")
		4	3-5/8" X 18 GA. STEEL STUDS AT 16" O.C. (MAX SPAN 10'-5")
	MID-SUPPORT	1	3-5/8" X 20 GA. STEEL STUDS AT 24" O.C. (MAX SPAN 11'-6")
		2	3-5/8" X 18 GA. STEEL STUDS AT 24" O.C. (MAX SPAN 12'-6")
		3	3-5/8" X 20 GA. STEEL STUDS AT 16" O.C. (MAX SPAN 13'-2")
		4	3-5/8" X 18 GA. STEEL STUDS AT 16" O.C. (MAX SPAN 14'-4")

STUD WIDTH			6"
* STUD GAUGE & SPACING REQ.	UNSUPPORTED	1	6" X 20 GA. STEEL STUDS AT 24" O.C. (MAX SPAN 9'-10")
		2	6" X 18 GA. STEEL STUDS AT 24" O.C. (MAX SPAN 10'-8")
		3	6" X 20 GA. STEEL STUDS AT 16" O.C. (MAX SPAN 11'-0")
		4	6" X 18 GA. STEEL STUDS AT 16" O.C. (MAX SPAN 11'-11")
	MID-SUPPORT	1	6" X 20 GA. STEEL STUDS AT 24" O.C. (MAX SPAN 14'-2")
		2	6" X 18 GA. STEEL STUDS AT 24" O.C. (MAX SPAN 15'-3")
		3	6" X 20 GA. STEEL STUDS AT 16" O.C. (MAX SPAN 15'-10")
		4	6" X 18 GA. STEEL STUDS AT 16" O.C. (MAX SPAN 17'-0")

WALL TYPES NOMENCLATURE

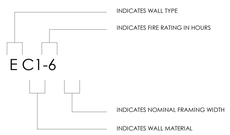

WALL TYPES

E	EXTERIOR
N	INTERIOR (NON-SPECIFIC)
C	CORRIDOR
V	VERTICAL CIRCULATION
U	UNIT SEPARATION
S	SHAFT
F	FURRING

WALL MATERIALS

W	WOOD
C	CONCRETE
N	INSULATED CONCRETE
S	METAL STUD
M	MASONRY
P	INSULATED METAL PANEL

NOMINAL FRAMING WIDTH EXAMPLES

0	1/2" RESILIENT CHANNEL
1	7/8" METAL CHANNEL, 1x1 WOOD STUD FURRING
2	2x2 WOOD STUD, 1 1/2" METAL STUD
3	2 1/2" METAL STUD, 2 1/2" C-H METAL STUD
4	2x4 WOOD STUD, 4" CONCRETE, 4" MASONRY, 3 5/8" METAL STUD
5	5 1/2" METAL STUD
6	2x6 WOOD STUD, 6" METAL STUD, 6" MASONRY, 6" CONCRETE
8	2x8 WOOD STUD, 8" METAL STUD, 8" CONCRETE, 8" CMU
9	9 1/4" TILT-UP
10	10" CONCRETE, 9 5/8" MASONRY, 10" PRE-CAST CONCRETE PANEL
12	12" CONCRETE, 12"(3/2/7)SANDWICH CONCRETE PANEL
14	14" CONCRETE, 14"(3/2/9)SANDWICH CONCRETE PANEL

aeurbia architects and engineers
909 West South Jordan Parkway
south jordan, utah 84095
phone: 801.746.0456 - fax: 801.575.6456
webpage: aeurbia.com

LICENSED ARCHITECT 174600 JAMES MICHAEL STATE OF UTAH

12/2/2022 6:03:20 PM

VELOCIRAX TI

LEHI BUSINESS PARK

850 EAST MILL POND DRIVE LEHI, UTAH

MARK	DESCRIPTION	Revision Date

Revision Schedule

AE2021.415

WALL TYPES

DATE: **PROJECT ISSUE DATE**

SHEET #:

G007

PROJECT STATUS

12/2/2022 6:03:20 PM

12/2/2022 6:03:20 PM

F:\AE URBIA JOBS\2021\AE2021.415 - MIKE HOMAN - Velocirax TI - Lehi Business Park\1 Architectural\VELOCIRAX TI.rvt

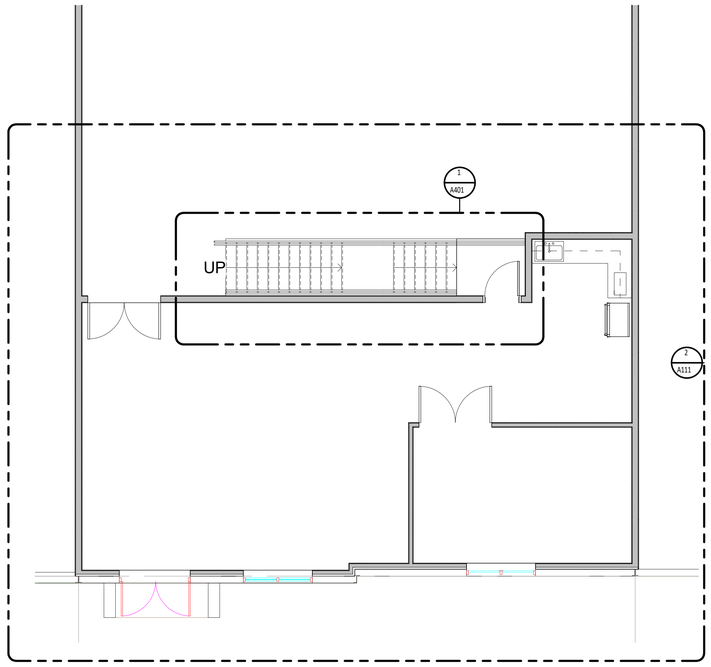

1 A101 **LEVEL 2 OVERALL FLOOR PLAN**

3/16" = 1'-0"

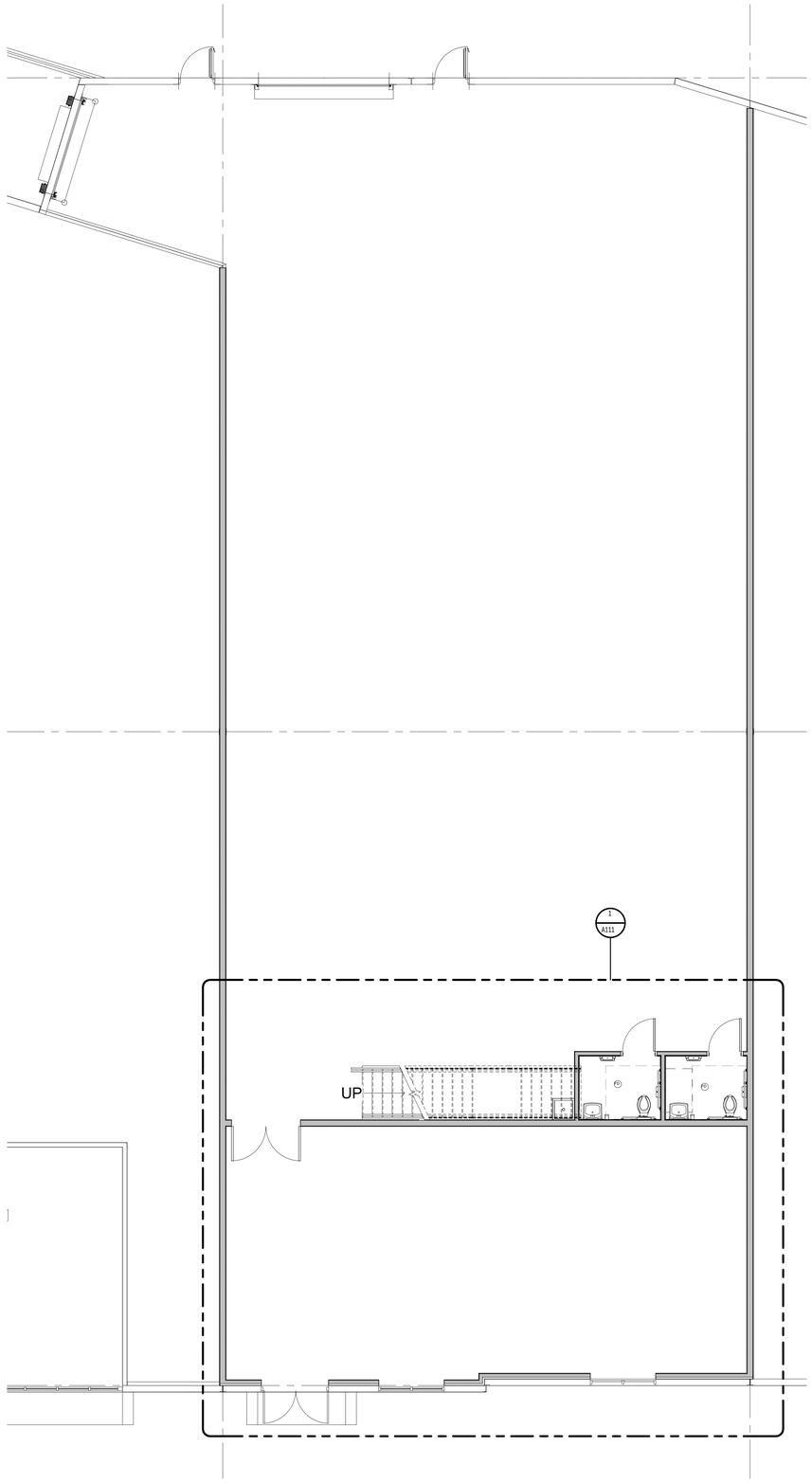

A5 A101 **LEVEL 1 OVERALL FLOOR PLAN**

3/16" = 1'-0"

0 4' 8' 12'

GRAPHIC SCALE

NORTH

GENERAL NOTES

1. INTERIOR DIMENSION AT FACE OF STUD, EXTERIOR DIMENSIONS AT FACE OF TILT-UP PANEL.
2. PRIOR TO CONSTRUCTION, CONTRACTOR TO VERIFY ALL COLORS AND MATERIALS.
3. INSTALL ALL MATERIALS PER MANUFACTURERS RECOMMENDATION.
4. ALL GYP. BOARD SURFACES TO BE TAPED, SANDED, AND PRIMED.
5. SEE STRUCTURAL DRAWINGS AND CALCULATIONS FOR ALL STRUCTURAL REQUIREMENTS.
6. COORDINATE ALL WINDOWS HEAD HEIGHTS AND SIZES WITH ELEVATIONS AND SCHEDULES.
7. FIRE RATED ASSEMBLIES SHALL BE CONTINUOUS BOTH HORIZONTALLY AND VERTICALLY AND SHALL EXTEND FROM RATED ASSEMBLY TO RATED ASSEMBLY. FIRE CAULK ALL PENETRATIONS.
8. FIRE EXTINGUISHERS, SMOKE DETECTORS, OTHER EMERGENCY DEVICE LOCATIONS, AND RATINGS SHALL BE APPROVED BY FIRE MARSHAL PRIOR TO INSTALLATION.
9. FRAMING CONTRACTOR SHALL PROVIDE ADDITIONAL BLOCKING THROUGHOUT THE PROJECT AS REQUIRED TO ACCOMMODATE WALL-MOUNTED FURNISHINGS, ARTWORK, ETC.
10. DOORS SHALL BE LOCATED 6" OFF OF ADJACENT WALL UNLESS NOTED OTHERWISE.
11. CONTRACTOR IS TO PROVIDE SUBMITTALS AND SHOP DRAWINGS ON ALL KEYNOTED ITEMS FOR APPROVAL FROM OWNER/ARCHITECT.
12. PRIOR TO ORDERING ANY EXTERIOR FINISHES, THE CONTRACTOR IS TO VERIFY ALL COLORS AND TYPES OF MATERIALS WITH OWNER/ARCHITECT
13. ALL ASPECTS OF THIS PROJECT SHALL COMPLY WITH THE AMERICANS WITH DISABILITIES ACT AND THE ASSOCIATED DETAILS - SEE G003 AND G004. IF CONFLICTS OCCUR WHICH MAKE COMPLIANCE WITH THE ADA IMPOSSIBLE, NOTIFY ARCHITECT IMMEDIATELY BEFORE CONTINUING THE WORK.

LEGEND

45-2 = DOOR TAGS

A = STOREFRONT WALL TAGS

XX/XXX = KEYNOTE TAGS

100 = ROOM NUMBER

C6 = WALL TYPE TAGS; SEE WALL TYPES ON G006

"C" = WALL TYPE
"6" = STUD SIZE

X / X/X = DETAILS CALL-OUTS TAGS

X / X/X = SECTION CUTS TAGS

KEY PLAN

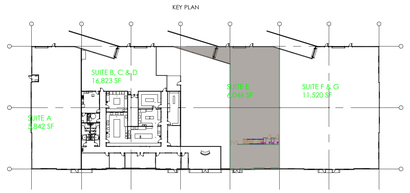

aeurbia
architects and engineers
909 West South Jordan Parkway
south jordan, utah 84095
phone: 801.746.0456 - fax: 801.575.6456
webpage: aeurbia.com

LICENSED ARCHITECT
174600
JAMES MICHAEL WALKER
STATE OF UTAH

12/2/2022 6:03:15 PM

VELOCIRAX TI

LEHI BUSINESS PARK

850 EAST MILL POND DRIVE LEHI, UTAH

Revision Schedule		
MARK	DESCRIPTION	Revision Date

AE2021.415

LEVEL 01
FLOOR PLAN

DATE: PROJECT ISSUE DATE

SHEET #:

A101

PROJECT STATUS

12/2/2022 6:03:15 PM

F:\AE URBIA JOBS\2021\AE2021.415 - MINE HOMAN - Velocirax TI - Lehi Business Park\Architectural\VELOCIRAX TI.rvt

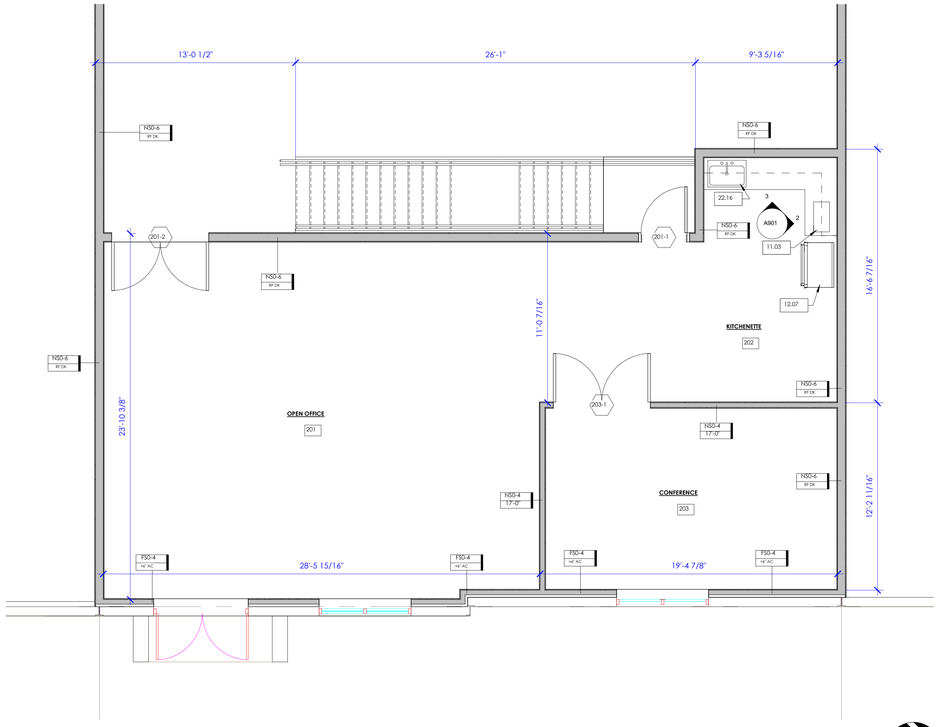

2 A111 **LEVEL 2 FLOOR PLAN - ENLARGED**

1/4" = 1'-0"

0 2' 4' 8'
GRAPHIC SCALE

NORTH

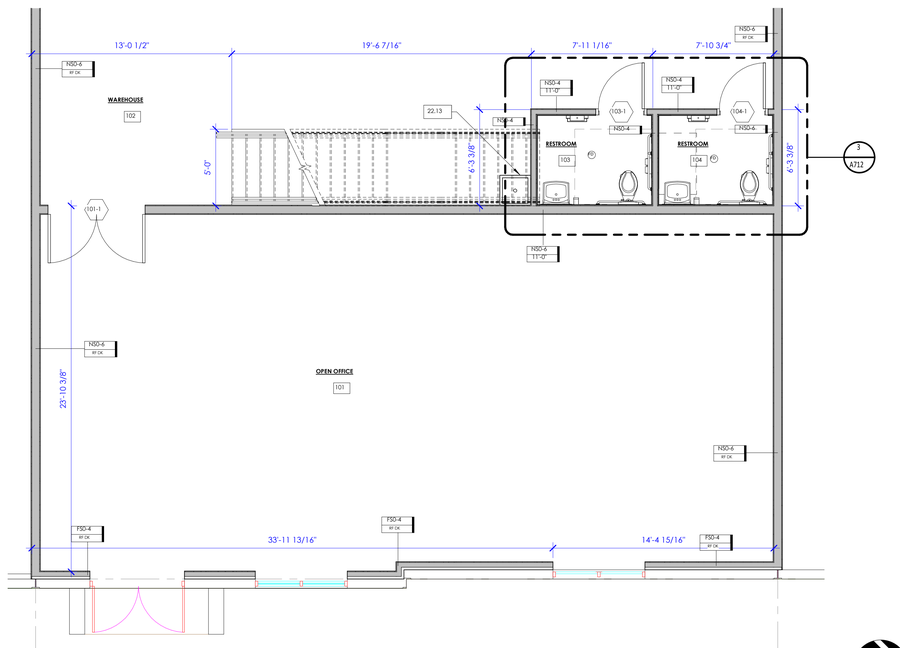

1 A111 **LEVEL 1 FLOOR PLAN - ENLARGED**

1/4" = 1'-0"

0 2' 4' 8'
GRAPHIC SCALE

NORTH

GENERAL NOTES

1. INTERIOR DIMENSION AT FACE OF STUD. EXTERIOR DIMENSIONS AT FACE OF TILT-UP PANEL.
2. PRIOR TO CONSTRUCTION, CONTRACTOR TO VERIFY ALL COLORS AND MATERIALS.
3. INSTALL ALL MATERIALS PER MANUFACTURERS RECOMMENDATION.
4. ALL GYP. BOARD SURFACES TO BE TAPED, SANDED, AND PRIMED.
5. SEE STRUCTURAL DRAWINGS AND CALCULATIONS FOR ALL STRUCTURAL REQUIREMENTS.
6. COORDINATE ALL WINDOWS HEAD HEIGHTS AND SIZES WITH ELEVATIONS AND SCHEDULES.
7. FIRE RATED ASSEMBLIES SHALL BE CONTINUOUS BOTH HORIZONTALLY AND VERTICALLY AND SHALL EXTEND FROM RATED ASSEMBLY TO RATED ASSEMBLY. FIRE CAULK ALL PENETRATIONS.
8. FIRE EXTINGUISHERS, SMOKE DETECTORS, OTHER EMERGENCY DEVICE LOCATIONS, AND RATINGS SHALL BE APPROVED BY FIRE MARSHAL PRIOR TO INSTALLATION.
9. FRAMING-CONTRACTOR SHALL PROVIDE ADDITIONAL BLOCKING THROUGHOUT THE PROJECT AS REQUIRED TO ACCOMMODATE WALL-MOUNTED FURNISHINGS, ARTWORK, ETC.
10. DOORS SHALL BE LOCATED 6" OFF OF ADJACENT WALL UNLESS NOTED OTHERWISE.
11. CONTRACTOR IS TO PROVIDE SUBMITTALS AND SHOP DRAWINGS ON ALL KEYNOTED ITEMS FOR APPROVAL FROM OWNER/ARCHITECT.
12. PRIOR TO ORDERING ANY EXTERIOR FINISHES, THE CONTRACTOR IS TO VERIFY ALL COLORS AND TYPES OF MATERIALS WITH OWNER/ARCHITECT
13. ALL ASPECTS OF THIS PROJECT SHALL COMPLY WITH THE AMERICANS WITH DISABILITIES ACT AND THE ASSOCIATED DETAILS - SEE G003 AND G004. IF CONFLICTS OCCUR WHICH MAKE COMPLIANCE WITH THE ADA IMPOSSIBLE, NOTIFY ARCHITECT IMMEDIATELY BEFORE CONTINUING THE WORK.

LEGEND

45-2 = DOOR TAGS

A = STOREFRONT WALL TAGS

xx/xxx = KEYNOTE TAGS

100 = ROOM NUMBER

C-6 = WALL TYPE TAGS; SEE WALL TYPES ON G006
"C" = WALL TYPE
"6" = STUD SIZE

X X/X = DETAILS CALL-OUTS TAGS

X X.X = SECTION CUTS TAGS

ENLARGED FLOOR PLAN KEYNOTES	
Key Value	Keynote Text
11.03	MICROWAVE PROVIDED BY TENANT
12.07	REFRIGERATOR - PROVIDED BY TENANT
22.13	PROVIDE SERVICE SINK AS SPECIFIED BY ENGINEER - SEE PLUMBING - PROVIDE SUBMITTAL FOR APPROVAL
22.16	STAINLESS STEEL SINK - SEE PLUMBING

KEY PLAN

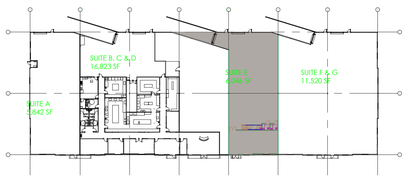

aeurbia
architects and engineers
909 West South Jordan Parkway
South Jordan, Utah 84095
phone: 801.746.0456 - fax: 801.575.6456
webpage: aeurbia.com

LICENSED ARCHITECT
174600
JAMES MICHAEL
STATE OF UTAH

12/2/2022 6:03:15 PM

VELOCIRAX TI

LEHI BUSINESS PARK

850 EAST MILL POND DRIVE LEHI, UTAH

Revision Schedule

MARK	DESCRIPTION	Revision Date

AE2021.415

ENLARGED FLOOR PLAN LEVEL 01 & 02

DATE: PROJECT ISSUE DATE

SHEET #:

A111

PROJECT STATUS

12/2/2022 6:03:15 PM

F:\AE URBIA JOBS\2021\AE2021.415 - MIKE HOKAN - Velocirax TI - Lehi Business Park\Architecture\VELOCIRAX TI.rvt

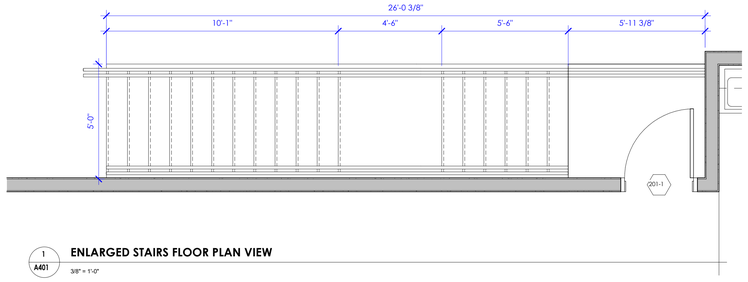

1 A401 **ENLARGED STAIRS FLOOR PLAN VIEW**

3/8" = 1'-0"

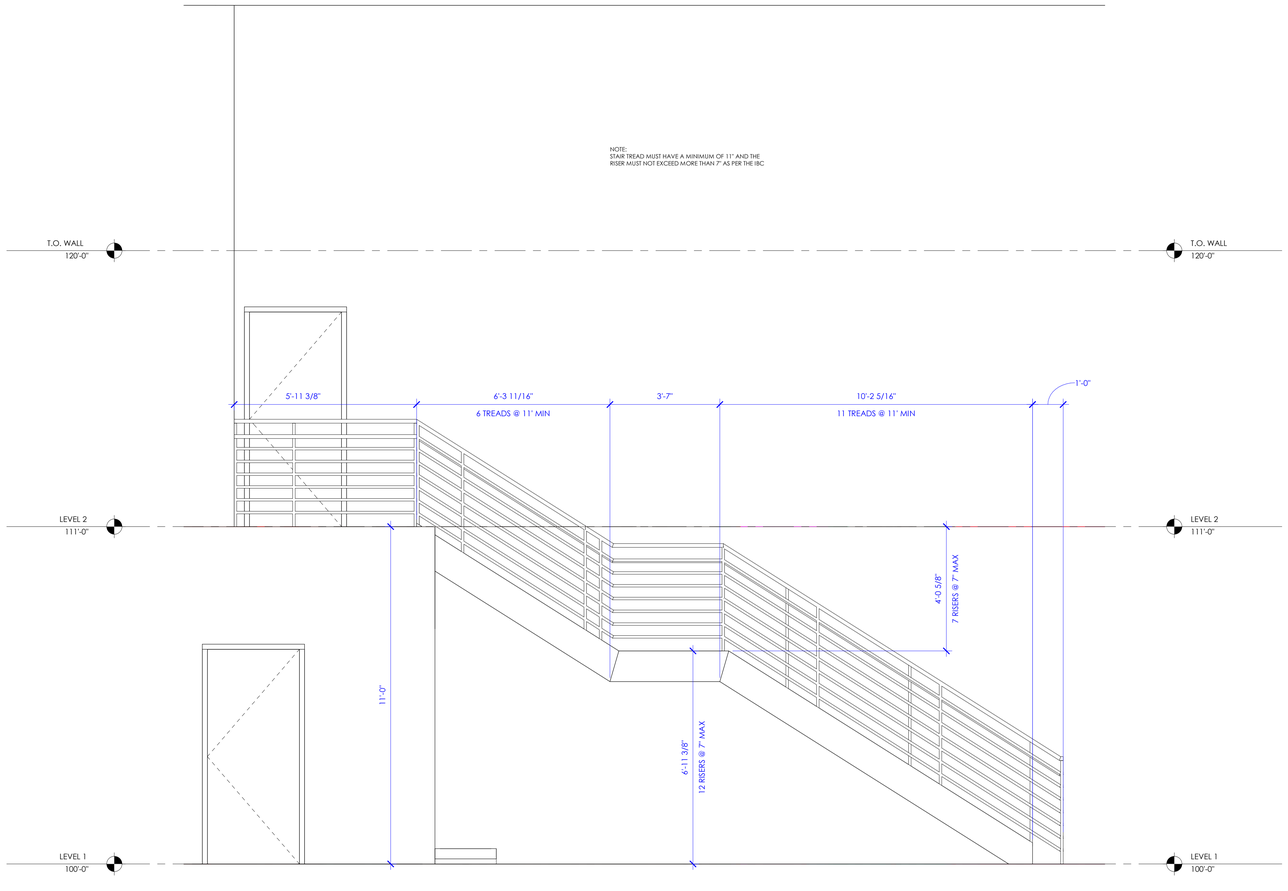

2 A401 **STAIRS ELEVATION**

1/2" = 1'-0"

aeurbia
architects and engineers
809 West South Jordan Parkway
south jordan, utah 84095
phone: 801.746.0456 - fax: 801.575.6456
webpage: aeurbia.com

LICENSED ARCHITECT
174600
JAMES MICHAEL
STATE OF UTAH

12/2/2022 6:03:16 PM

VELOCIRAX TI

LEHI BUSINESS PARK

850 EAST MILL POND DRIVE LEHI, UTAH

Revision Schedule

MARK	DESCRIPTION	Revision Date

AE2021.415

STAIR PLANS AND SECTIONS

DATE: **PROJECT ISSUE DATE**

SHEET #:

A401

PROJECT STATUS

12/2/2022 6:03:16 PM

12/2/2022 6:03:16 PM

F:\AE URBIA JOBS\2021\AE2021.415 - SHKE HORAM - Velocirax TI - Lehi Business Park\1. Architecture\VELOCIRAX TI.rvt

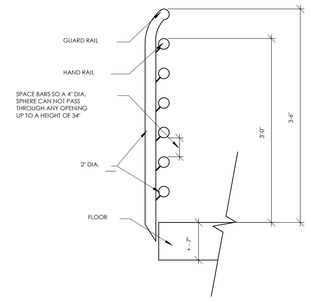

5 A411 **GUARD/HANDRAIL DETAIL**
1" = 1'-0"

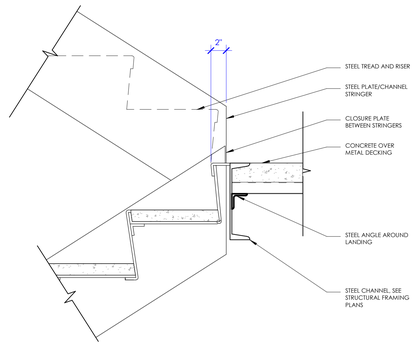

1 A411 **METAL STAIRS @ CONCRETE LANDING**
1 1/2" = 1'-0"

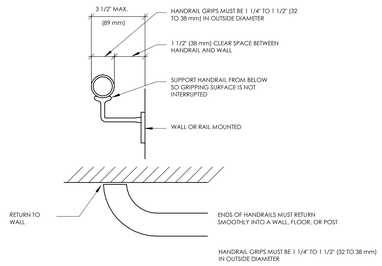

6 A411 **HANDRAIL DETAIL**
1 1/2" = 1'-0"

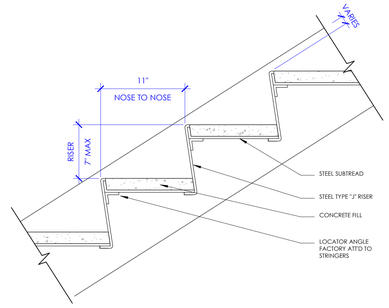

2 A411 **STAIR TREAD W/ CONCRETE**
1 1/2" = 1'-0"

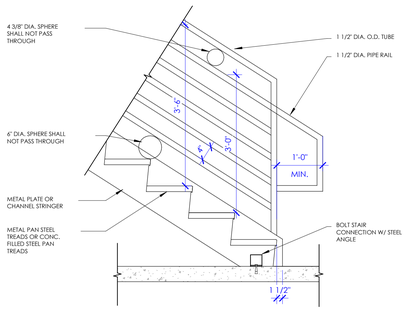

7 A411 **STAIR TO FLOOR ATTACHMENT - TYP.**
3/4" = 1'-0"

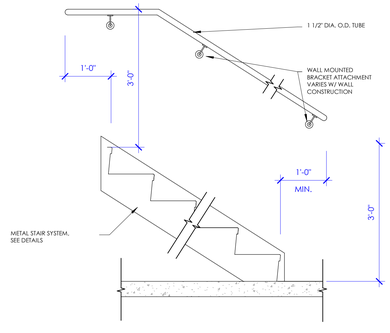

3 A411 **STAIR HANDRAIL DETAIL**
3/4" = 1'-0"

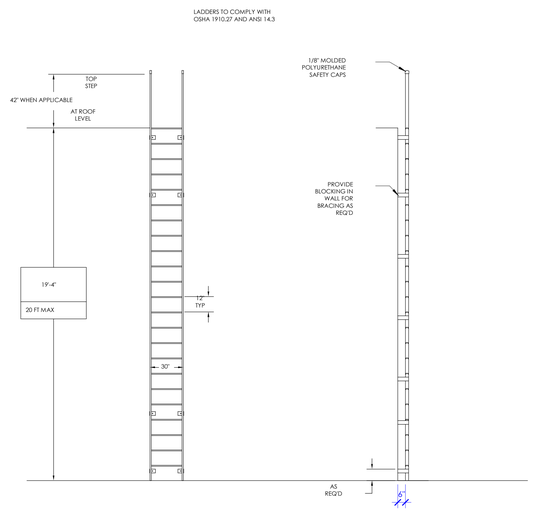

12 A411 **PERMANENT ROOF ACCESS LADDER**
1/4" = 1'-0"

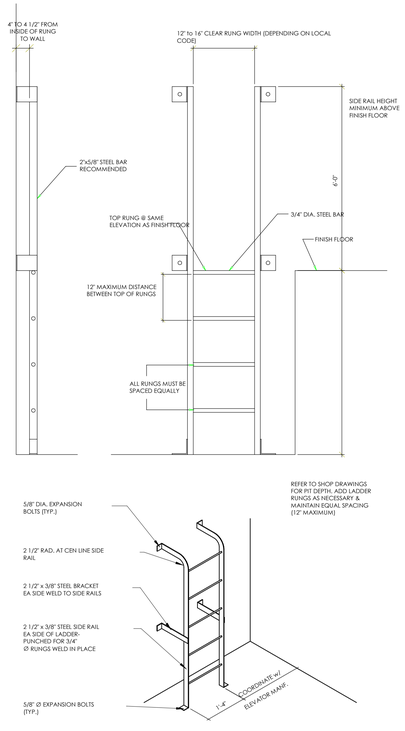

10 A411 **ELEVATOR PIT LADDER**
N.T.S

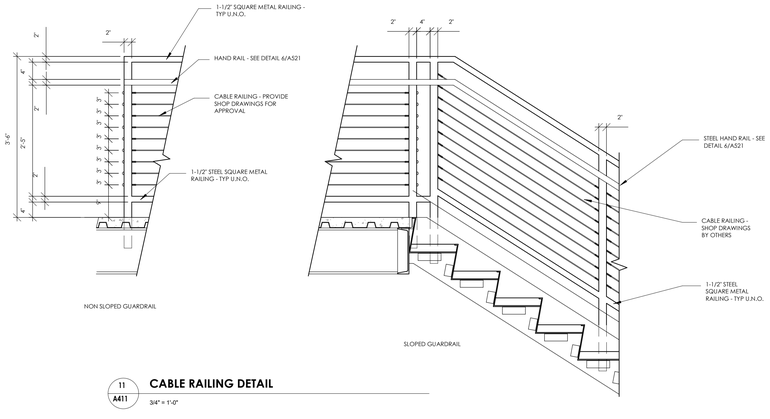

11 A411 **CABLE RAILING DETAIL**
3/4" = 1'-0"

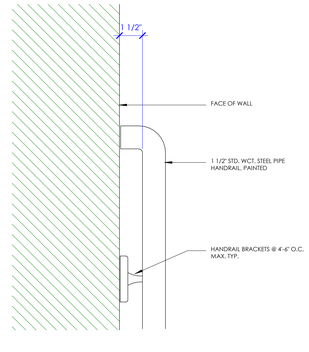

8 A411 **HANDRAIL TO WALL DETAIL**
3" = 1'-0"

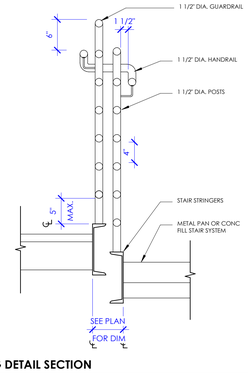

4 A411 **STAIR/RAILING DETAIL SECTION**
1" = 1'-0"

aeurbia architects and engineers
909 West South Jordan Parkway
south jordan, utah 84095
phone: 801.746.0456 - fax: 801.575.6456
webpage: aeurbia.com

LICENSED ARCHITECT 174600 JAMES MICHAEL WALKER STATE OF UTAH

12/2/2022 6:03:16 PM

VELOCIRAX TI
LEHI BUSINESS PARK
850 EAST MILL POND DRIVE LEHI, UTAH

Revision Schedule

MARK	DESCRIPTION	Revision Date

AE2021.415

STAIR AND LADDER DETAILS

PROJECT STATUS

DATE: **PROJECT ISSUE DATE**

SHEET #:

A411

12/2/2022 6:03:16 PM

F:\AE URBIA JOBS\2021\AE2021.415 - SHIRE HORAN - Velocirax TI - Lehi Business Park\1 Architecture\VELOCIRAX TI.rvt

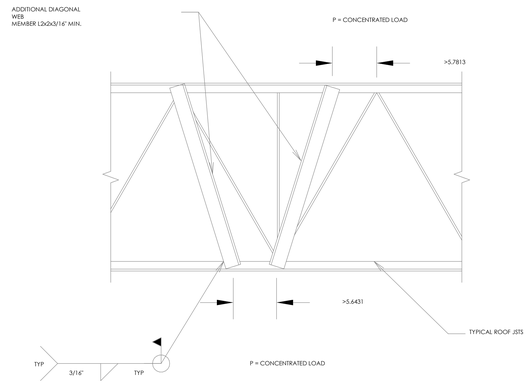

NOTE: WHERE CONCENTRATED LOADS ON OPEN WEB JSTS ARE LOCATED MORE THAN 6" FROM THE PANEL POINTS, ADDITIONAL DIAGONAL WEB MEMBERS SHALL BE FURNISHED AND INSTALLED @ THE LOCATION OF THE CONCENTRATED LOAD.

8 A511 TYPICAL JOIST REINFORCEMENT DETAIL

1 1/2" = 1'-0"

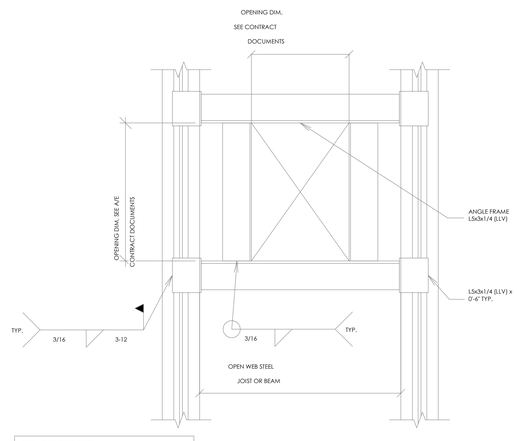

NOTE: ROOF DECK WELD TO ANGLE FRAME.

9 A511 TYPICAL ROOF OPENING DETAIL

1 1/2" = 1'-0"

SOLID BLOCK THE FLUTES OF THE STEEL DECK BENEATH THE CURB OF THE MECHANICAL UNIT w/ A 151 1/2x1 1/2x3/16 x 0'-6", TACK WELDED TO THE STEEL DECK OR w/ SOLID BLOCKING CONNECTED TO THE STEEL DECK.

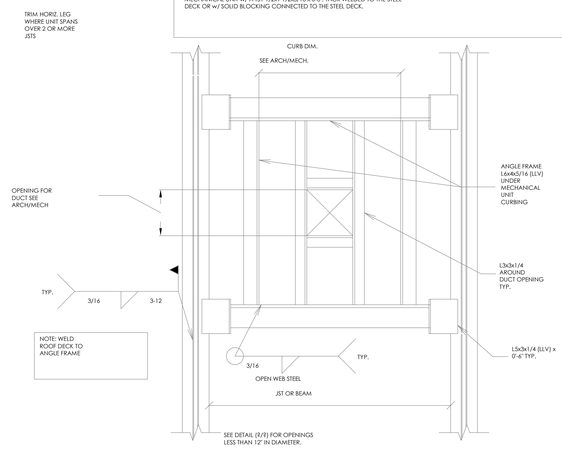

NOTE: WELD ROOF DECK TO ANGLE FRAME

10 A511 TYPICAL ROOF TOP MECHANICAL UNIT SUPPORT DETAIL

1 1/2" = 1'-0"

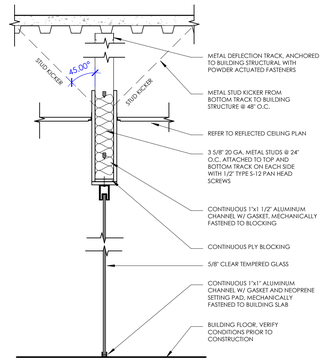

5 A511 GLASS WALL PARTITION1

1" = 1'-0"

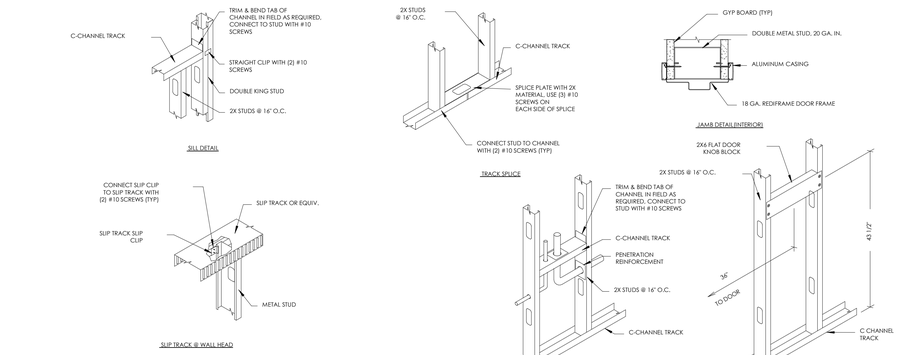

3 A511 TYPICAL METAL FRAMING DETAILS1

1" = 1'-0"

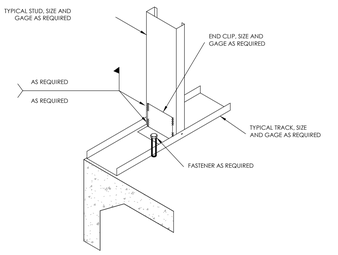

6 A511 TYPICAL BASE CONNECTION1

3/4" = 1'-0"

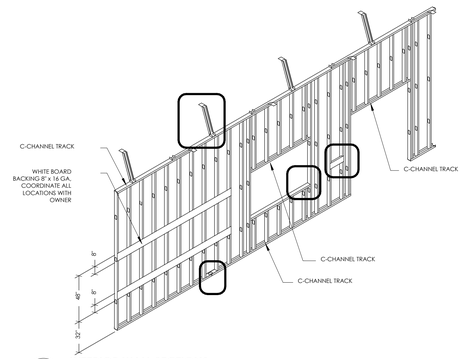

4 A511 INTERIOR WALL SECTION1

1" = 1'-0"

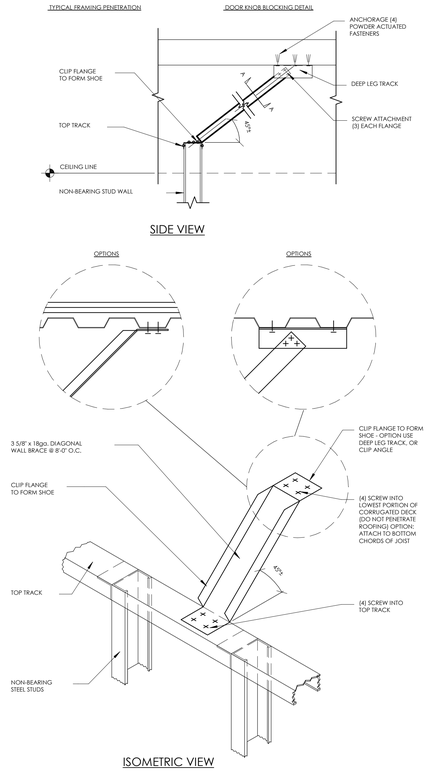

1 A511 NON-BEARING INTERIOR WALL W/ BRACE1

1" = 1'-0"

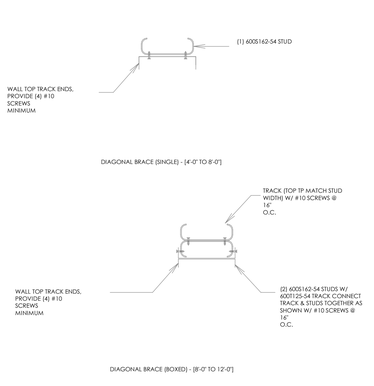

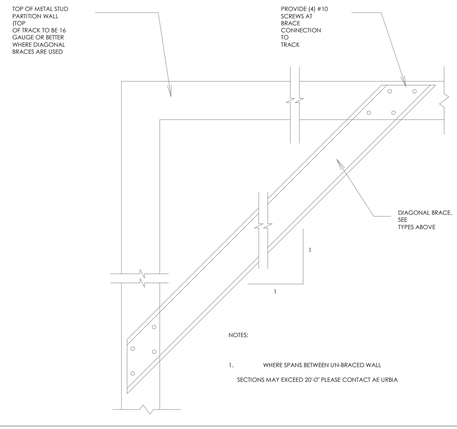

NOTES:

1. WHERE SPANS BETWEEN UN-BRACED WALL SECTIONS MAY EXCEED 20'-0" PLEASE CONTACT AE URBIA

11 A511 DIAGONAL BRACE DETAIL

1 1/2" = 1'-0"

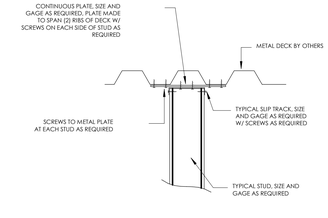

2 A511 CONNECTION TO METAL DECK1

3/4" = 1'-0"

aeurbia
architects and engineers
909 West South Jordan Parkway
south jordan, utah 84095
phone: 801.746.0456 - fax: 801.575.6456
webpage: aeurbia.com

LICENSED ARCHITECT 174600 JAMES MICHAEL WILLMORE STATE OF UTAH

12/2/2022 6:03:16 PM

PERMIT SET

VELOCIRAX TI

LEHI BUSINESS PARK

850 EAST MILL POND DRIVE LEHI, UTAH

Revision Schedule

MARK	DESCRIPTION	DATE

AE2021.415

INTERIOR & HVAC FRAMING DETAILS

DATE: 12/2/2022 6:03:16 PM

SHEET #:

A511

PROJECT STATUS

12/2/2022 6:03:16 PM

F:\AE URBIA JOBS\2021\AE2021.415 - SHRE HORAM - Velocirax TI - Lehi Business Park\1. Architecture\VELOCIRAX TI.rvt

12/2/2022 6:03:17 PM

Door Schedule										
MARK	Door					FRAME MATERIAL	DOOR TYPE	HARDWARE TYPE	FOOTNOTES
	WIDTH	HEIGHT	THICKNESS	MATERIAL	FINISH				
101-1	6'-4"	7'-0"	2"	HALF GLAZED/WOOD	STAIN	HM	C	2	A
103-1	3'-0"	7'-0"	1 3/4"	WOOD	STAIN	HM	A	3	
104-1	3'-0"	7'-0"	1 3/4"	WOOD	STAIN	HM	A	3	
201-1	3'-0"	7'-0"	1 3/4"	WOOD	STAIN	HM	B	2	A
201-2	6'-4"	7'-0"	2"	HALF GLAZED/WOOD	STAIN	HM	E	1	A
203-1	6'-4"	7'-0"	2"	GLAZING		HM	D	1	

HARDWARE SCHEDULE

1
HINGES: (3) 4/12" x 4 1/2" SCHLAGE - BRUSHED CHROME
PASSAGE: (1) LEVER PASSAGE SET - BRUSHED CHROME
FRAME: (1) DOOR STOP, (3) SILENCERS

2
HINGES: (3) 4 1/2" X 4 1/2" SCHLAGE -BRUSHED CHROME
PASSAGE: (1) LEVER PASSAGE SET - BRUSHED CHROME
FRAME: (1) DOOR STOP, (3) SILENCERS, (1) SWEEPER, (1) CLOSER, (1) GASKETING, (1) WEATHER STRIP

3
HINGES: (3) 4 1/2" X 4 1/2" SCHLAGE - BRUSHED CHROME
PASSAGE: (1) LEVER PASSAGE SET W/INDICATOR & LOCK - BRUSHED CHROME
FRAME: (1) DOOR STOP, (3) SILENCERS, (1) CLOSER, (1) COAT HOOK, (1) GASKETING, (2) KICKPLATES

DOOR PANEL NOTES:

WOOD DOORS: PLAIN SLICED WHITE MAPLE WITH MAPLE EDGES, PRE-FINISHED TO CLEARFINISH. CLEAR-500, LD-2 PARTICALE BOARD CORE (MINERAL CORE AS REQUIRED BY FIRE RATING), PREMIUM GRADE A, FIVE PLY WITH MATCHING EDGES MANUFACTURERS LIFE-TIME WARRANTY.
ALL HOLLOW METAL FRAMES: TO BE PAINTED "FIRE STEEL" DURON B7944M, SEMI GLOSS.

DOOR HARDWARE NOTES:

HINGES: BALL BEARING HINGES THROUGHOUT. STAINLESS STEEL AT EXTERIOR.
LOCKS: GRADE 1, SERIES 4000 SCHLAGE ND SERIES OR ALL LOCKS TO BE MASTERKEYED, GRANDMASTER KEYED PER OWNERS REQUIREMENTS. ALL LOCKS NEED TO BE "PUSH AND TWIST," NOT „JUST "PUSH".
CLOSERS: GRADE 1 EQUAL TO LCN 4000 SERIES OR STANLEY EQUAL.
THRESHOLDS, DRIP CAPS, SWEEPS AND WEATHER STRIP: PEMKO OR NATIONAL GUARD
DOOR STOPS: EACH DOOR WITH A CLOSER NEEDS A HEAVY DUTY DOOR STOP OVERHEAD.
EGRESS DOORS: EACH EGRESS DOOR EXCEPT THE MAIN EXTERIOR FRONT ENTRANCE NEEDS TO HAVE A PANIC PUSH BAR.

KEYING TYPE

PVCY	=	PRIVACY LOCKS
KEY	=	KEYED LOCK
TB	=	THUMB BOLT
CR	=	CARD READER
MG	=	MAGNETIC LOCK
ES	=	ELECTRIC STRICK
KOTB	=	KEY OUTSIDE, THUMB TURN INSIDE
TBMK	=	DEADBOLTS, MARKED LOCKED/UNLOCKED
LO	=	LOCK SET KEYED OUTSIDE
DBK	=	DEADBOLT KEYED BOTH SIDES
KOPB	=	KEY OUTSIDE, PANIC PUSH BAR INSIDE

GLAZING LEGEND

1
1/4" CLEAR GLAZING

2
MONOLITHIC 1/4" TEMPERED SAFETY GLAZING

GLAZING NOTES
1: ALL ALUMINUM FRAMES TO MATCH EXISTING STOREFRONTS

GENERAL NOTES:

1. ALL DOOR HARDWARE TO BE LEVEL TYP MECHANISMS.
2. EXIT DOORS SHALL BE OPENABLE FROM THE INSIDE WITHOUT THE USE OF A KEY OR ANY SPECIAL KNOWLEDGE OR EFFORT.
3. MASTER KEY ALL LOCKSETS WITH IC-CORES.
4. MANUAL FLUSH BOLTS FOR THE DOUBLE DOORS ARE ONLY ALLOWED IN THE INACTIVE DOOR ACCESSING MECHANICAL AND STORAGE ROOMS.
5. PROVIDE DOOR STOPS OR BUMPERS AT ALL DOOR LOCATIONS WHERE DOOR COMES IN CONTACT WITH ADJACENT WALL. COORDINATE TYPE AND PLACEMENT WITH OWNER.
6. ALL ALUMINUN FRAMES TO BE KAWNEER METAL FRAMES OR EQUAL.
7. ALL KNOCK-DOWN & WELD FRAMES TO BE PAINT GRADE.
8. ALL FIRE RATED DOORS AND ASSEMBLIES SHALL BE LABELED BY AN APPROVED TESTING LABRATORY INDICATING THE RATING OF THE DOOR.

FOOTNOTES:

A. ALL DOUBLE DOORS TO BE INSTALLED WITH ADDITIONAL HARDWARE: AUTOMATIC FLUSH BOLT: SATIN CHROME, 1/2 IN BOLT HEAD DIA., BRASS/STAINLESS STEEL, 1 IN WD.

TEMPERED GLAZING NOTES:

HUMAN IMPACT LOADS. INDIVIDUAL GLAZED AREAS, INCLUDING GLASS MIRRORS, IN HAZARDOUS LOCATIONS AS DEFINED BELOW SHALL COMPLY WITH SECTIONS 2406.1.1 THROUGH 2406.1.5 OF THE IBC(INTERNATIONAL BUILDING CODE).

IDENTIFICATION OF SAFETY GLAZING. EACH PANE OF SAFETY GLAZING INSTALLED IN HAZARDOUS LOCATIONS SHALL BE IDENTIFIED BY A LABEL SPECIFYING THE LABELER WHETHER THE MANUFACTURER OR INSTALLER, AND THE SAFETY GLAZING STANDARD WITH WHICH IT COMPLIES, AS WELL AS THE INFORMATION SPECIFIED IN SECTION 2403.1 OF THE IBC(INTERNATIONAL BUILDING CODE). THE LABEL SHALL BE ACID ETCHED, SAND BLASTED, CERAMIC FIRED OR AN EMBOSSED MARK, OR SHALL BE OF A TYPE THAT ONCE APPLIED CANNOT BE REMOVED WITHOUT BEING DESTROYED.
EXCEPTIONS:
1. FOR OTHER THAN TEMPERED GLASS, LABELS ARE NOT REQUIRED, PROVIDED THE BUILDING OFFICIAL APPROVES THE USE OF A CERTIFICATE, AFFIDAVIT OR OTHER EVIDENCE CONFIRMING COMPLIANCE WITH THIS CODE.
2. TEMPERED SPANDREL GLASS IS PERMITTED TO BE IDENTIFIED BY THE MANUFACTURER WITH A REMOVABLE PAPER LABEL.

HAZARDOUS LOCATIONS. THE FOLLOWING SHALL BE CONSIDERED SPECIFIC HAZARDOUS LOCATIONS REQUIRING SAFETY GLAZING MATERIALS:
1. GLAZING IN SWINGING DOORS.
2. GLAZING IN FIXED AND SLIDING PANELS OF SLIDING DOOR ASSEMBLIES AND PANELS IN SLIDING AND BIFOLD CLOSET DOOR ASSEMBLIES.
3. GLAZING IN STORM DOORS.
4. GLAZING IN UNFRAMED SWINGING DOORS.
5. GLAZING IN DOORS AND ENCLOSURES FOR HOT TUBS, WHIRLPOOLS, SAUNAS, STEAM ROOMS, BATHTUBS AND SHOWERS. GLAZING IN ANY PORTION OF A BUILDING WALL ENCLOSING THESE COMPARTMENTS WHERE THE BOTTOM EXPOSED EDGE OF THE GLAZING IS LESS THAN 60 INCHES (1524 MM) ABOVE A STANDING SURFACE.
6. GLAZING IN AN INDIVIDUAL FIXED OR OPERABLE PANEL ADJACENT TO A DOOR WHERE THE NEAREST EXPOSED EDGE OF THE GLAZING IS WITHIN A 24-INCH (610 MM) ARC OF EITHER VERTICAL EDGE OF THE DOOR IN A CLOSED POSITION AND WHERE THE BOTTOM EXPOSED EDGE OF THE GLAZING IS LESS THAN 60 INCHES (1524 MM) ABOVE THE WALKING SURFACE.
EXCEPTIONS:
1. PANELS WHERE THERE IS AN INTERVENING WALL OR OTHER PERMANENT BARRIER BETWEEN THE DOOR AND GLAZING.
2. WHERE ACCESS THROUGH THE DOOR IS TO A CLOSET OR STORAGE AREA 3 FEET (914 MM) OR LESS IN DEPTH. GLAZING IN THIS APPLICATION SHALL COMPLY WITH SECTION 2406.3, ITEM 7.
3. GLAZING IN WALLS PERPENDICULAR TO THE PLANE OF THE DOOR IN A CLOSED POSITION. OTHER THAN THE WALL TOWARDS WHICH THE DOOR SWINGS WHEN OPENED, IN ONE- AND TWO- FAMILY DWELLINGS OR WITHIN DWELLING UNITS IN GROUP R-2.
7. GLAZING IN AN INDIVIDUAL FIXED OR OPERABLE PANEL, OTHER THAN IN THOSE LOCATIONS DESCRIBED IN PRECEDING ITEMS 5 AND 6, WHICH MEETS ALL OF THE FOLLOWING CONDITIONS:
7.1. EXPOSED AREA OF AN INDIVIDUAL PANE GREATER THAN 9 SQUARE FEET (0.84 M2);
7.2. EXPOSED BOTTOM EDGE LESS THAN 18 INCHES (457 MM) ABOVE THE FLOOR;
7.3. EXPOSED TOP EDGE GREATER THAN 36 INCHES (914 MM) ABOVE THE FLOOR; AND
7.4. ONE OR MORE WALKING SURFACE(S) WITHIN 36 INCHES (914 MM) HORIZONTALLY OF THE PLANE OF THE GLAZING.
EXCEPTION: SAFETY GLAZING FOR ITEM 7 IS NOT REQUIRED FOR THE FOLLOWING INSTALLATIONS:
1. A PROTECTIVE BAR 1-1/2 INCHES (38 MM) OR MORE IN HEIGHT, CAPABLE OF WITHSTANDING A HORIZONTAL LOAD OF 50 POUNDS PLF (730 N/M) WITHOUT CONTACTING THE GLASS, IS INSTALLED ON THE ACCESSIBLE SIDES OF THE GLAZING 34 INCHES TO 38 INCHES (864 MM TO 965 MM) ABOVE THE FLOOR.
2. THE OUTBOARD PANE IN INSULATING GLASS UNITS OR MULTIPLE GLAZING WHERE THE BOTTOM EXPOSED EDGE OF THE GLASS IS 25 FEET (7620 MM) OR MORE ABOVE ANY GRADE, ROOF, WALKING SURFACE OR OTHER HORIZONTAL OR SLOPED (WITHIN 45 DEGREES OF HORIZONTAL) (0.78 RAD) SURFACE ADJACENT TO THE GLASS EXTERIOR.
8. GLAZING IN GUARDS AND RAILINGS, INCLUDING STRUCTURAL BALUSTER PANELS AND NONSTRUCTURAL IN-FILL PANELS, REGARDLESS OF AREA OR HEIGHT ABOVE A WALKING SURFACE - MUST ALSO BE LAMINATED PER IBC 2407.
9. GLAZING IN WALLS AND FENCES ENCLOSING INDOOR AND OUTDOOR SWIMMING POOLS, HOT TUBS AND SPAS WHERE ALL OF THE FOLLOWING CONDITIONS ARE PRESENT:
9.1. THE BOTTOM EDGE OF THE GLAZING ON THE POOL OR SPA SIDE IS LESS THAN 60 INCHES (1524 MM) ABOVE A WALKING SURFACE ON THE POOL OR SPA SIDE OF THE GLAZING; AND
9.2. THE GLAZING IS WITHIN 60 INCHES (1524 MM) HORIZONTALLY OF THE WATER'S EDGE OF A SWIMMING POOL OR SPA.
10. GLAZING ADJACENT TO STAIRWAYS, LANDINGS AND RAMPS WITHIN 36 INCHES (914 MM) HORIZONTALLY OF A WALKING SURFACE; WHEN THE EXPOSED SURFACE OF THE GLASS IS LESS THAN 60 INCHES (1524 MM) ABOVE THE PLANE OF THE ADJACENT WALKING SURFACE - MUST ALSO BE LAMINATED PER IBC 2407.
11. GLAZING ADJACENT TO STAIRWAYS WITHIN 60 INCHES (1524 MM) HORIZONTALLY OF THE BOTTOM TREAD OF A STAIRWAY IN ANY DIRECTION WHEN THE EXPOSED SURFACE OF THE GLASS IS LESS THAN 60 INCHES (1524 MM) ABOVE THE NOSE OF THE TREAD - MUST ALSO BE LAMINATED PER IBC 2407.
EXCEPTION: SAFETY GLAZING FOR ITEM 10 OR 11 IS NOT REQUIRED FOR THE FOLLOWING INSTALLATIONS WHERE:
1. THE SIDE OF A STAIRWAY, LANDING OR RAMP WHICH HAS A GUARDRAIL OR HANDRAIL, INCLUDING BALUSTERS OR IN-FILL PANELS, COMPLYING WITH THE PROVISIONS OF SECTIONS 1012 AND 1607.7; AND
2. THE PLANE OF THE GLASS IS GREATER THAN 18 INCHES (457 MM) FROM THE RAILING.

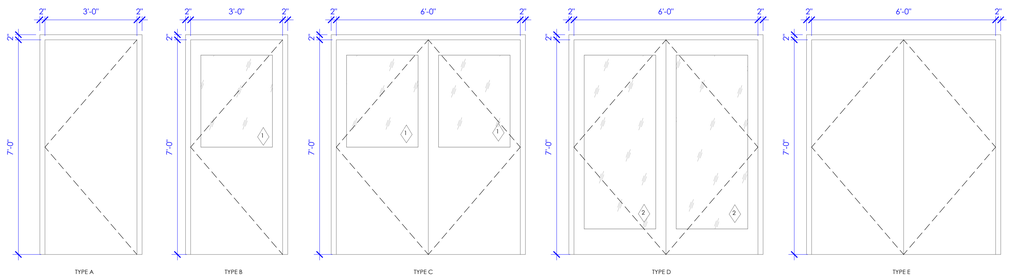

A6 - DOOR ELEVATIONS

1/2" = 1'-0"

aeurbia
architects and engineers
909 West South Jordan Parkway
South Jordan, Utah 84095
phone: 801.746.0456 - fax: 801.575.6456
webpage: aeurbia.com

LICENSED ARCHITECT
174600
JAMES MICHAEL
STATE OF UTAH

12/2/2022 6:03:17 PM

VELOCIRAX TI
LEHI BUSINESS PARK
850 EAST MILL POND DRIVE LEHI, UTAH

Revision Schedule

MARK	DESCRIPTION	Revision Date

AE2021.415

DOOR SCHEDULES

PROJECT STATUS

DATE: **PROJECT ISSUE DATE**

SHEET #:

A601

12/2/2022 6:03:17 PM

FILE URBIA JOBS\2021\AE2021.415 - BIKE FORUM - Velocirax TI - Lehi Business Park\1. Architecture\VELOCIRAX TI.rvt

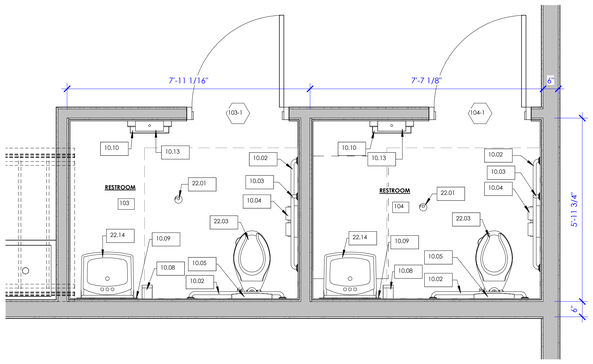

3 / A712 **LEVEL 1 ENLARGED RESTROOMS FLOOR PLAN**

1/2" = 1'-0"

RESTROOM KEYNOTES	
Key Value	Keynote Text
10.02	ADA COMPLIANT GRAB BAR HORIZONTAL - AS PER 2017 ICC A117.1 ACCESSIBLE AND USABLE BUILDINGS AND FACILITIES
10.03	ADA COMPLIANT GRAB BAR VERTICAL - AS PER 2017 ICC A117.1 ACCESSIBLE AND USABLE BUILDINGS AND FACILITIES
10.04	ADA COMPLIANT TOILET PAPER DISPENSER - AS PER 2017 ICC A117.1 ACCESSIBLE AND USABLE BUILDINGS AND FACILITIES
10.05	ADA COMPLIANT TOILET SEAT COVER DISPENSER - AS PER 2017 ICC A117.1 ACCESSIBLE AND USABLE BUILDINGS AND FACILITIES
10.08	ADA COMPLIANT WALL MOUNTED SOAP DISPENSER- AS PER 2017 ICC A117.1 ACCESSIBLE AND USABLE BUILDINGS AND FACILITIES
10.09	ADA COMPLIANT MIRROR - STANDARD CHROME - AS PER 2017 ICC A117.1 ACCESSIBLE AND USABLE BUILDINGS AND FACILITIES
10.10	ADA COMPLIANT TRASH CAN - BRUSHED NICKEL - AS PER 2017 ICC A117.1 ACCESSIBLE AND USABLE BUILDINGS AND FACILITIES
10.13	WALL MOUNTED PAPER TOWEL DISPENSER - AS PER 2017 ICC A117.1 ACCESSIBLE AND USABLE BUILDINGS AND FACILITIES
22.01	PROVIDE DRAIN - SEE PLUMBING PLANS
22.03	ADA COMPLIANT TOILET - WALL MOUNTED FLUSH VALVE
22.14	WALL HUNG SINK

2 / A712 **LEVEL 2 REFLECTED CEILING PLAN**

3/16" = 1'-0"

0 4' 8' 12'
GRAPHIC SCALE

NORTH

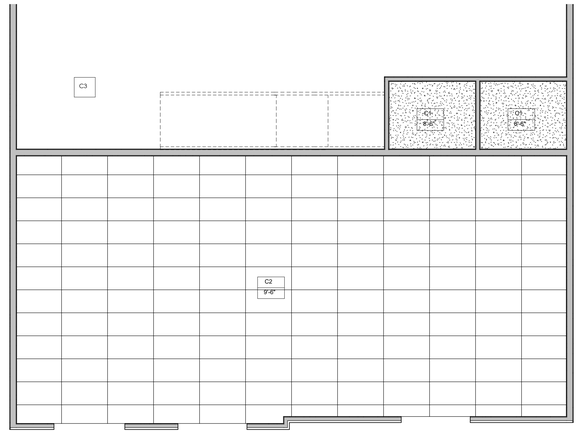

1 / A712 **LEVEL 1 REFLECTED CEILING PLAN**

3/16" = 1'-0"

0 4' 8' 12'
GRAPHIC SCALE

NORTH

RCP LEGEND

C1	GYP. BD. - PAINTED.	
C2	2' x 4' ACOUSTICAL CEILING TILE.	
C3	OPEN TO STRUCTURE	

CEILING KEY LEGEND
CEILING TYPES — C-X
CEILING HEIGHT — X'

EXIT — PROVIDED EXIT SIGN AS REQUIRED

INDICATES ANGLE BRACE FOR SEISMIC STABILITY. SEE DETAILS ON AS11

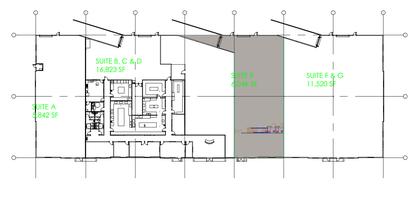

aeurbia architects and engineers
909 West South Jordan Parkway
south jordan, utah 84095
phone: 801.746.0456 - fax: 801.575.6456
webpage: aeurbia.com

LICENSED ARCHITECT 174600 JAMES MICHAEL STATE OF UTAH

12/2/2022 6:03:17 PM

VELOCIRAX TI
LEHI BUSINESS PARK
850 EAST MILL POND DRIVE LEHI, UTAH

Revision Schedule		
MARK	DESCRIPTION	Revision Date

AE2021.415

REFLECTED CEILING & ENLARGED RESTROOM PLANS

DATE: PROJECT ISSUE DATE

SHEET #:

A712

PROJECT STATUS

12/2/2022 6:03:17 PM

12/2/2022 6:03:17 PM

F:\AE URBIA JOBS\2021\AE2021.415 - SHRE HORAM - Velocirax TI - Lehi Business Park\1. Architecture\VELOCIRAX TI.rvt

Room Schedule									
				Wall Finish					
Room Number	Room Name	Floor Finish	Base Finish	Wall Finish East	Wall Finish North	Wall Finish South	Wall Finish West	Ceiling Finish	Footnotes
101	OPEN OFFICE	F5	B1	W1	W1	W1	W1	C2	
102	WAREHOUSE	F4						C3	
103	RESTROOM	F2	B1	W2, W1	W2, W1	W2, W1	W2, W1	C1	
104	RESTROOM	F2	B1	W2, W1	W2, W1	W2, W1	W2, W1	C1	
201	OPEN OFFICE	F1	B1	W1	W1	W1	W1	C2	
202	KITCHENETTE	F3	B1	W1	W1	W1	W1	C2	
203	CONFERENCE	F1	B1	W1	W1	W1	W1	C2	

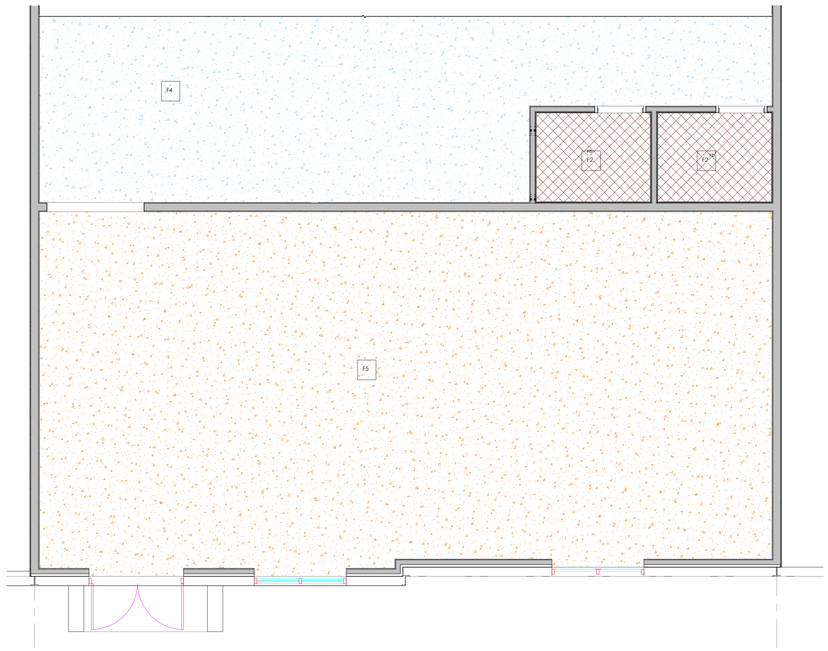

1 A901 **LEVEL 1 FINISH LAYOUT**

1/4" = 1'-0"

FINISH NOTES

FLOORS

F1 - CARPET - SHAW CONTRACT - STYLE SUSPEND ST391, STILL 88481, 24" X 24" WITH A QUARTER TURN INSTALLATION

F2 - VCT - ARMSTRONG IMPERIAL TEXTURE - STANDARD EXCELON, 51810 WASHED LINEN, 12" x 12"

F3 - LVT - SHAW CONTRACT - SOUNDSCAPE, SILK 63121, INSTALLATION IN ASHLAR

F4 - EXISTING CONCRETE

F5 - SEALED CONCRETE

CEILING

C1 - GYPSUM BOARD - PAINTED, EGGSHELL FINISH, SHERWIN WILLIAMS: ORIGINAL WHITE SW7027

C2 - 2' x 4' LAY-IN ACOUSTICAL TILE

C3 - EXPOSED STRUCTURE

WALLS

W1 - WILSONART - STANDARD LAMINATE, CRYSTAL D388-60, MATTE FINISH

W2 - FRP - CRANE COMPOSITES - SMOOTH WHITE FINISH WITH BLACK ALUMINUM TRIM 12" X 24" TO 4'-0" A.F.F (OR APPROVED EQUAL). WALLS ABOVE PAINTED W1

COUNTERTOP

CT1 - COUNTERTOPS - WILSONART - STANDARD LAMINATE RUSTIC SLATE 888-38 FINE VELVET FINISH

CB1 - WILSONART - PREMIUM LAMINATE, WHITE DRIFTWOOD 8200K-16 CASUAL RUSTIC FINISH AEON SCRATCH RESISTANCE

BASE

B1 - 6" RUBBER COVED - BURKE COLLECTION 103 ESPRESSO

NOTES:

1. ALL DIFFERENT TYPES OF FINISHES MUST TERMINATE ON INTERIOR CORNERS NEVER ON EXTERIOR CORNERS UNLESS NOTED DIFFERENTLY.
2. ALL CABINETS MUST BE APPROVED PRIOR TO FABRICATION BY SHOP DRAWINGS.
3. PAINTED GYPSUM BOARD CEILING SHALL BE SMOOTH FINISH.
4. VERIFY WITH SUPERINTENDENT THE FINAL CHANGES TO THE FINISH SCHEDULE.
5. FLOOR CARPET SHALL BE TESTED IN ACCORDANCE WITH NFPA 253 AND BE A CLASS I (0.45 WATTS PER SQ. CM) IN CORRIDORS, EXIT ENCLOSURES AND EXIT PASSAGEWAYS AND CLASS II (0.22 WATTS PER SQ. CM) IN ALL OTHER ROOMS.
6. WALL CARPET SHALL BE TESTED IN ACCORDANCE WITH NFPA 253 AND BE A CLASS I (0.45 WATTS PER SQ. CM) IN CORRIDORS, EXIT ENCLOSURES AND EXIT PASSAGEWAYS AND CLASS II (0.22 WATTS PER SQ. CM) IN ALL OTHER ROOMS.

FOOTNOTES:

A. FRP TO BE ADDED BEHIND MOP SINK TO 4'-0" A.F.F. EXTENDED 2'-0" PASSED EDGES OF MOP SINK ALONG THE WALL.

FINISH FLOOR LEGEND

F1 - CARPET TILE

F2 - PORCELAIN TILE

F3 - LVT

F4 - EXISTING CONCRETE

F5 - SEALED CONCRETE

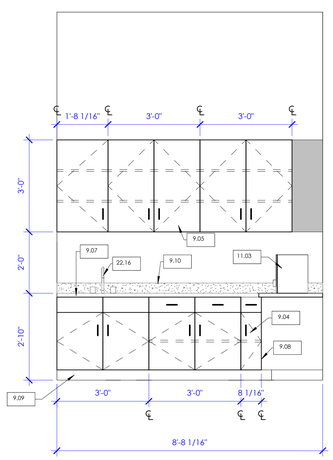

3 A901 **WEST CABINET ELEVATION**

1/2" = 1'-0"

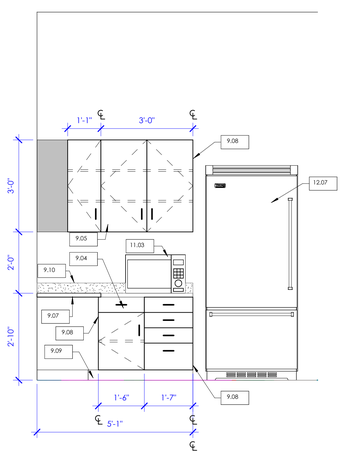

2 A901 **NORTH CABINET ELEVATION**

1/2" = 1'-0"

CABINET KEYNOTES	
Key Value	Keynote Text
9.04	PROVIDE CABINET FINISH AS PER CBT1 - SEE FINISH SCHEDULE
9.05	PROVIDE UPPER CABINET FINISH AS PER CB1 - SEE FINISH SCHEDULE
9.07	PROVIDE COUNTER TOP FINISH AS PER CT1 - SEE FINISH SCHEDULE
9.08	LAMINATE EXPOSED SIDE OF CABINET
9.09	LAMINATE KICKER TO MATCH CB1 AS PER FINISH SCHEDULE
9.10	PROVIDE 4" HIGH LAMINATE BACKSPLASH TO MATCH CT1, CAULK AND SEAL FOR PROTECTION FROM WATER
11.03	MICROWAVE PROVIDED BY TENANT
12.07	REFRIGERATOR - PROVIDED BY TENANT
22.16	STAINLESS STEEL SINK - SEE PLUMBING

aeurbia architects and engineers
909 West South Jordan Parkway
south jordan, utah 84095
phone: 801.746.0456 - fax: 801.575.6456
webpage: aeurbia.com

LICENSED ARCHITECT 174600 JAMES MICHAEL STATE OF UTAH

12/2/2022 6:03:18 PM

VELOCIRAX TI

LEHI BUSINESS PARK

850 EAST MILL POND DRIVE LEHI, UTAH

Revision Schedule		
MARK	DESCRIPTION	Revision Date

AE2021.415

CABINET ELEVATIONS & LEVEL 1 FINISH PLAN

DATE: **PROJECT ISSUE DATE**

SHEET #:

A901

PROJECT STATUS

12/2/2022 6:03:18 PM

P:\AE URBIA JOBS\2021\AE2021.415 - MIKE HORAN - Velocirax TI - Lehi Business Park\1 Architectural\VELOCIRAX T1.rvt

CEILING GRID NOTES

1. A HEAVY DUTY T-BAR GRID SYSTEM SHALL BE USED.
2.THE WIDTH OF THE PERIMETER SUPPORTING CLOSURE ANGLE SHALL BE NOT LESS THAN 2.0 IN. (50 mm). IN EACH ORTHOGONAL HORIZONTAL DIRECTION, ONE END OF THE CEILING GRID SHALL BE ATTACHED TO THE CLOSURE ANGLE 8" MAX. FROM WALL; THE OTHER END IN EACH HORIZONTAL DIRECTION SHALL HAVE A SPACER BAR WITH A 3/4 IN. (19mm)CLEARANCE FROM THE WALL AND SHALL REST UPON AND BE FREE TO SLIDE ON A CLOSURE ANGLE.
3. FOR CEILING AREAS EXCEEDING 1000 SQ/FT. (92.9 SQ/mm), HORIZONTAL RESTRAINT OF THE CEILING TO THE STRUCTURAL SYSTEM SHALL BE PROVIDED. PER DETAIL SHOWN BELOW.
4. FOR CEILING AREAS EXCEEDING 2500 SQ/FT. (232 SQ/mm), A SEISMIC SEPARATION JOINT OR FULL HEIGHT PARTITION THAT BREAKS THE CEILING UP INTO AREAS NOT EXCEEDING 2500 SQ/FT. SHALL BE PROVIDED UNLESS STRUCTURAL ANALYSIS ARE PERFORMED OF THE CEILING BRACING SYSTEM FOR THE PRESCRIBED SEISMIC FORCES WHICH DEMONSTRATE CEILING SYSTEM PENETRATIONS AND CLOSURE ANGLES PROVIDE SUFFICIENT CLEARANCE TO ACCOMMODATE THE ADDITIONAL MOVEMENT. EACH AREA SHALL BE PROVIDED WITH CLOSURE ANGLES IN ACCORDANCE WITH ITEM B AND HORIZONTAL RESTRAINTS OR BRACING IN ACCORDANCE WITH ITEM C.
5. ALL SUSPENDED CEILING TRACK LOCATED IN PARKING GARAGE SHALL BE 15/16" ARMSTRONG PRELUDE XL OR OTHER APPROVED EXTERIOR CEILING GRID SYSTEM.

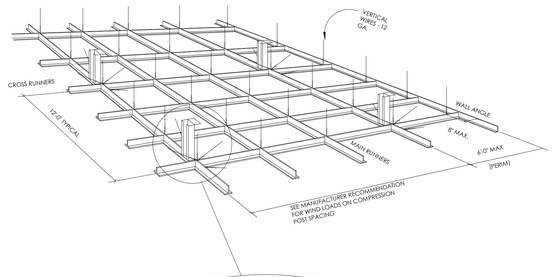

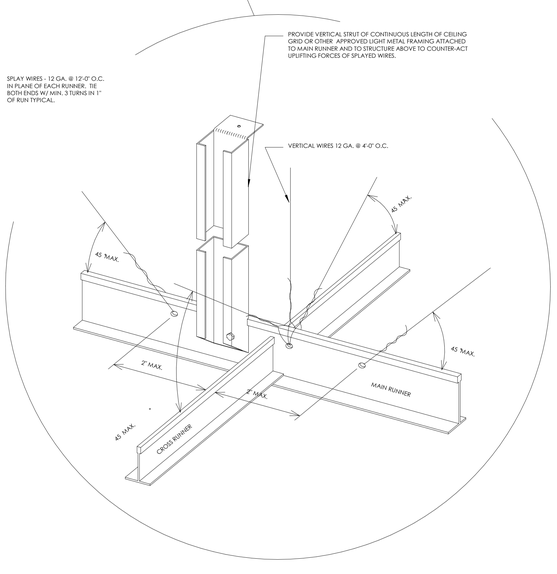

5. EXCEPT WHERE RIGID BRACES ARE USED TO LIMIT LATERAL DEFLECTIONS, SPRINKLER HEADS AND OTHER PENETRATIONS SHALL HAVE A 2 in. (50mm) OVERSIZE RING, SLEEVE, OR ADAPTER THROUGH THE CEILING TILE TO ALLOW FOR FREE MOVEMENT OF AT LEAST 1 IN. (25 mm) OF CEILING MOVEMENT IN ALL HORIZONTAL DIRECTIONS ARE PERMITTED TO BE PROVIDED AT THE TOP OF THE SPRINKLER HEAD EXTENSION.
6. CHANGES IN CEILING PLAN ELEVATION SHALL BE PROVIDED WITH POSITIVE BRACING.
7. CABLE TRAYS AND ELECTRICAL CONDUITS SHALL BE SUPPORTED INDEPENDENTLY OF THE CEILING.
8. CEILING AREAS OF 144 SQ. ft. OR LESS SURROUNDED BY WALLS WHICH CONNECT DIRECTLY TO THE STRUCTURE ABOVE SHALL NOT REQUIRE THE DIAGONAL BRACING WIRES.
9. EACH VERTICAL WIRE SHALL BE ATTACHED EACH END WITH MIN. 3 TURNS.
10. CEILING GRID SHALL BE INSTALLED LEVEL TO WITHIN 1/8" IN 12 FEET.
11. LOCAL KINKS OR BENDS SHALL NOT BE MADE IN HANGER WIRES AS A MEANS OF LEVELING MAIN RUNNERS.
12. ALL WIRE LOOPS SHALL BE TIGHTLY WRAPPED AND SHARPLY BENT.15. INTEGRAL
13. CEILINGS/SPRINKLER CONSTRUCTION: AS AN ALTERNATIVE TO PROVIDING LARGE CLEARANCES AROUND SPRINKLER SYSTEM PENETRATIONS THROUGH CEILING SYSTEMS, THE SPRINKLER SYSTEM AND CEILING GRID ARE PERMITTED TO BE DESIGNED AND TIED TOGETHER AS AN INTEGRAL UNIT, SUCH A DESIGN SHALL CONSIDER THE MASS AND FLEXIBILITY OF ALL ELEMENTS INVOLVED, INCLUDING: CEILING SYSTEM, SPRINKLER APPURTENANCES. THE DESIGN SHALL BE PERFORMED BY A REGISTERED DESIGN PROFESSIONAL.
14. CEILING MOUNTED LIGHT FIXTURES: ALL CEILING MOUNTED LIGHT FIXTURES SHALL BE ATTACHED TO SUSPENDED CEILING GRID. IN ADDITION 12 GA. HANGER WIRES SHALL BE ATTACHED AT OPPOSITE CORNERS TO THE GRID WITHIN 3" OF EACH CORNER OF THE FIXTURE. TWO ADDITIONAL WIRES SHALL BE CONNECTED TO THE LIGHT HOUSING AND TO THE STRUCTURE ABOVE (THESE WIRES MAY BE SLACK). WIRES SHALL NOT ATTACH TO OR BEND AROUND INTERFERING MATERIAL OR EQUIPMENT, NOR SHALL THEY BE CLOSER THAN 4" FROM ANY UN-BRACED HORIZONTAL PIPING OR DUCTWORK. A TRAPEZE OR SIMILAR DEVICE SHALL BE USED WHERE OBSTRUCTIONS OCCUR. IBC 1621.2.5.2.2 SEISMIC DESIGN CATEGORIES D, E, OR F.
15. SPREADER BARS: SPREADER (SPACER, STABILIZER) BARS SHALL BE USED TO PREVENT THE ENDS OF THE MAIN BEAMS AND CROSS TEES AT PERIMETER WALLS FROM SPREADING OPEN DURING A SEISMIC EVENT. PERIMETER WIRES SHALL NOT BE USED IN LIEU OF SPREADER BARS. IF APPROVED BY THE LOCAL JURISDICTION, PERIMETER CLIPS MAY BE USED TO SATISFY THE REQUIREMENTS FOR SPREADER BARS.

A3 / A912 **GENERAL CEILING GRID NOTES**
3/16" = 1'-0"

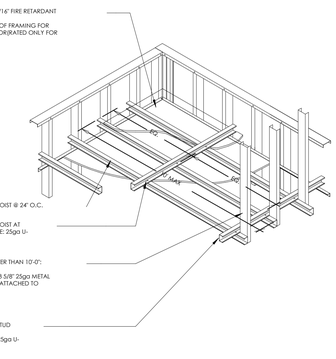

D1 / A912 **FRAMED GYPSUM CEILING**
1" = 1'-0"

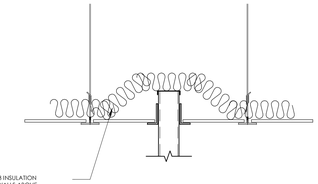

A1 / A912 **WALL INSULATION**
1" = 1'-0"

aeurbia architects and engineers
909 West South Jordan Parkway
south jordan, utah 84095
phone: 801.746.0456 - fax: 801.575.6456
webpage: aeurbia.com

LICENSED ARCHITECT 174600 JAMES MICHAEL STATE OF UTAH

12/2/2022 6:03:18 PM

VELOCIRAX TI
LEHI BUSINESS PARK
850 EAST MILL POND DRIVE LEHI, UTAH

Revision Schedule

MARK	DESCRIPTION	Revision Date

AE2021.415

CEILING DETAILS

DATE: PROJECT ISSUE DATE

SHEET #:

A912

PROJECT STATUS

12/2/2022 6:03:18 PM

F:\AE URBIA JOBS\2021\AE2021.415 - MINE HOMAN - Velocirax TI - Lehi Business Park\1 Architecture\VELOCIRAX TI.rvt

Room Schedule

Room Number	Room Name	Floor Finish	Base Finish	Wall Finish: Wall Finish East	Wall Finish: Wall Finish North	Wall Finish: Wall Finish South	Wall Finish: Wall Finish West	Ceiling Finish	Footnotes
101	OPEN OFFICE	F5	B1	W1	W1	W1	W1	C2	
102	WAREHOUSE	F4						C3	
103	RESTROOM	F2	B1	W2, W1	W2, W1	W2, W1	W2, W1	C1	
104	RESTROOM	F2	B1	W2, W1	W2, W1	W2, W1	W2, W1	C1	
201	OPEN OFFICE	F1	B1	W1	W1	W1	W1	C2	
202	KITCHENETTE	F3	B1	W1	W1	W1	W1	C2	
203	CONFERENCE	F1	B1	W1	W1	W1	W1	C2	

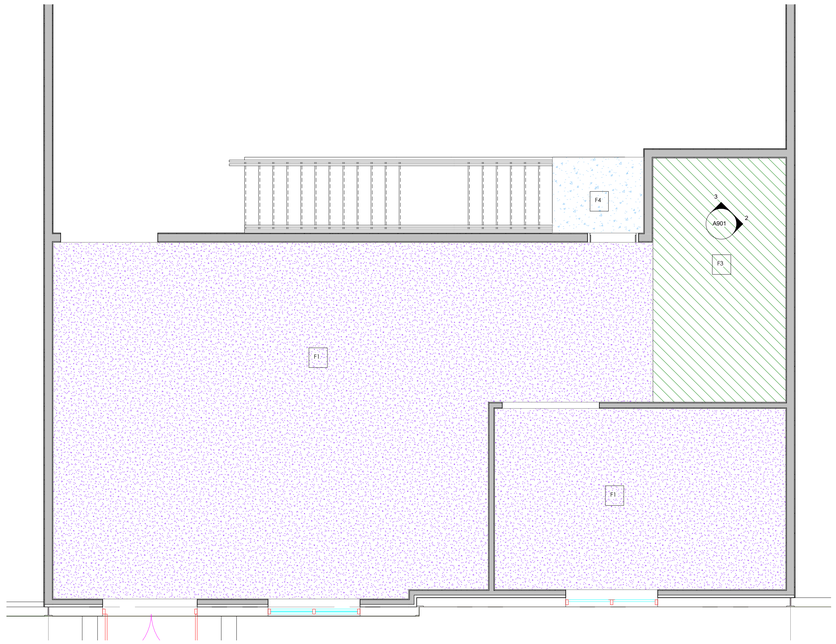

1 A921 **LEVEL 2 FINISH LAYOUT**

1/4" = 1'-0"

FINISH NOTES

FLOORS

F1 - CARPET - SHAW CONTRACT - STYLE SUSPEND ST391, STILL 88481, 24" X 24" WITH A QUARTER TURN INSTALLATION

F2 - VCT - ARMSTRONG IMPERIAL TEXTURE - STANDARD EXCELON, S1810 WASHED LINEN, 12" x 12"

F3 - LVT - SHAW CONTRACT - SOUNDSCAPE, SILK 63121, INSTALLATION IN ASHLAR

F4 - EXISTING CONCRETE

F5 - SEALED CONCRETE

CEILING

C1 - GYPSUM BOARD - PAINTED, EGGSHELL FINISH, SHERWIN WILLIAMS; ORIGINAL WHITE SW7077

C2 - 2' x 4' LAY-IN ACOUSTICAL TILE

C3 - EXPOSED STRUCTURE

WALLS

W1 - WILSONART - STANDARD LAMINATE, CRYSTAL D38B-60, MATTE FINISH

W2 - FRP - CRANE COMPOSITES - SMOOTH WHITE FINISH WITH BLACK ALUMINUM TRIM. 12" X 24" TO 4'-0" A.F.F (OR APPROVED EQUAL). WALLS ABOVE PAINTED W1

COUNTERTOP

CT1 - COUNTERTOPS - WILSONART - STANDARD LAMINATE RUSTIC SLATE 888-38 FINE VELVET FINISH

CB1 - WILSONART - PREMIUM LAMINATE, WHITE DRIFTWOOD 8200K-16 CASUAL RUSTIC FINISH AEON SCRATCH RESISTANCE

BASE

B1 - 6" RUBBER COVED - BURKE COLLECTION 103 ESPRESSO

NOTES:

1. ALL DIFFERENT TYPES OF FINISHES MUST TERMINATE ON INTERIOR CORNERS NEVER ON EXTERIOR CORNERS UNLESS NOTED DIFFERENTLY.
2. ALL CABINETS MUST BE APPROVED PRIOR TO FABRICATION BY SHOP DRAWINGS.
3. PAINTED GYPSUM BOARD CEILING SHALL BE SMOOTH FINISH.
4. VERIFY WITH SUPERINTENDENT THE FINAL CHANGES TO THE FINISH SCHEDULE.
5. FLOOR CARPET SHALL BE TESTED IN ACCORDANCE WITH NFPA 253 AND BE A CLASS I (0.45 WATTS PER SQ. CM) IN CORRIDORS, EXIT ENCLOSURES AND EXIT PASSAGEWAYS AND CLASS II (0.22 WATTS PER SQ. CM) IN ALL OTHER ROOMS.
6. WALL CARPET SHALL BE TESTED IN ACCORDANCE WITH NFPA 253 AND BE A CLASS I (0.45 WATTS PER SQ. CM) IN CORRIDORS, EXIT ENCLOSURES AND EXIT PASSAGEWAYS AND CLASS II (0.22 WATTS PER SQ. CM) IN ALL OTHER ROOMS.

FOOTNOTES:

A. FRP TO BE ADDED BEHIND MOP SINK TO 4'-0" A.F.F. EXTENDED 2'-0" PASSED EDGES OF MOP SINK ALONG THE WALL.

FINISH FLOOR LEGEND

F1 - CARPET TILE

F2 - PORCELAIN TILE

F3 - LVT

F4 - EXISTING CONCRETE

F5 - SEALED CONCRETE

aeurbia architects and engineers
909 West South Jordan Parkway
south jordan, utah 84095
phone: 801.746.0456 - fax: 801.575.6456
webpage: aeurbia.com

LICENSED ARCHITECT 174600 JAMES MICHAEL WALKER STATE OF UTAH

12/2/2022 6:03:18 PM

VELOCIRAX TI

LEHI BUSINESS PARK

850 EAST MILL POND DRIVE LEHI, UTAH

Revision Schedule

MARK	DESCRIPTION	Revision Date

AE2021.415

LEVEL 2 FINISH PLAN

DATE: **PROJECT ISSUE DATE**

SHEET #:

A921

PROJECT STATUS

12/2/2022 6:03:18 PM

12/2/2022 6:03:18 PM

F:\AE URBIA JOBS\2021\AE2021.415 - MIKE HORAN - Velocirax TI - Lehi Business Park_Architecture\VELOCIRAX TI.rvt

DESIGN CODE

2018 INTERNATIONAL BUILDING CODE (IBC)

DESIGN CRITERIA

SEISMIC DESIGN CRITERIA

RISK CATEGORY = II
SEISMIC IMPORTANCE FACTOR, IE = 1.0
SOIL SITE CLASS = D
SEISMIC DESIGN CATEGORY = D
CALCULATED BUILDING PERIOD, T = 0.14 SECONDS

MAPPED SPECTRAL RESPONSE ACCELERATIONS
  SHORT PERIOD ACCELERATION, SS = 1.228G
  1-SECOND ACCELERATION, S1 = 0.444G
SEISMIC RESPONSE COEFFICIENTS
  SHORT PERIOD SITE COEFFICIENT, FA = 1.2
  LONG PERIOD SITE COEFFICIENT, FV = 1.99
DESIGN SPECTRAL RESPONSE ACCELERATIONS
  SHORT PERIOD ACCELERATION, SDS = 0.982G
  1-SECOND ACCELERATION, SD1 = 0.589G

LATERAL FORCE RESISTING SYSTEM

LIGHT FRAME WOOD SHEAR WALLS:
  RESPONSE MODIFICATION FACTOR, R = 6.5
  SYSTEM OVERSTRENGTH FACTOR, NΩ = 3.0
  DEFLECTION AMPLIFICATION FACTOR, CD = 4.0
  SEISMIC RESPONSE COEFFICIENT, CS = 0.151

SPECIAL CONCRETE SHEAR WALLS:
  RESPONSE MODIFICATION FACTOR, R = 5.0
  SYSTEM OVERSTRENGTH FACTOR, NΩ = 2.5
  DEFLECTION AMPLIFICATION FACTOR, CD = 5.0
  SEISMIC RESPONSE COEFFICIENT, CS = 0.196

SEISMIC ANALYSIS PROCEDURE = ELF

DESIGN LOADS

FLOOR LOADS

FLOOR DEAD LOAD = 30 PSF
OFFICE LIVE LOAD = 50 PSF + 15 PSF PARTITION = 65 PSF

EARTHWORK

DESIGN CRITERIA

SOIL BEARING PRESSURE: 1500 PSF (ASSUMED)
FROST PROTECTION: 30 INCHES

REQUIREMENTS

1. CONTRACTOR SHALL VERIFY AT TIME OF CONSTRUCTION THAT SOIL CONDITIONS ARE ADEQUATE FOR ASSUMED SOIL DESIGN CRITERIA BY OBTAINING A SOILS REPORT FROM A REGISTERED GEOTECHNICAL ENGINEER. IF A SOILS REPORT IS NOT OBTAINED, THE CONTRACTOR SHALL PROCEED AT THEIR OWN RISK.
2. ANY UNFORESEEN CONDITIONS ENCOUNTERED DURING SITE PREPARATION SHALL BE BROUGHT TO THE ATTENTION OF THE ARCHITECT AND ENGINEER.
3. CONTRACTOR SHALL STRIP THE BUILDING AREA FROM ALL VEGETATION, DEBRIS, AND TOPSOIL. CONTRACTOR SHALL EXCAVATE ANY REMAINING LOOSE NATURAL OR FILL SOILS TO EXPOSE COMPETENT NATURAL SOILS. CONTRACTOR SHALL REMOVE EXISTING FOOTINGS, FOUNDATIONS, SLABS, SITE PAVING, DEBRIS, AND STRUCTURES AS REQUIRED.
4. CONTRACTOR SHALL CHECK FOR SOFT SPOTS OR OTHER UNSUITABLE SOILS BY PROOF ROLLING THE ENTIRE BUILDING PAD AREA WITH NORMAL COMPACTION EQUIPMENT. REMOVE UNSUITABLE MATERIALS AND REPLACE WITH COMPACTED ENGINEERED STRUCTURAL FILL OR 2,000 PSI LEAN CONCRETE, (FLOWABLE FILL).
5. ENGINEERED OR STRUCTURAL FILL MATERIAL SHALL BE WELL-GRADED, GRANULAR, WITH A MAXIMUM SIZE LESS THAN 4 INCHES, AND NOT MORE THAN 18 PERCENT FINES PASSING A NO. 200 SIEVE. PLACE STRUCTURAL FILL IN MAXIMUM LIFTS OF 8 INCHES. COMPACT STRUCTURAL FILL TO 95 PERCENT OF THE MAXIMUM LABORATORY DENSITY AS DETERMINED BY ASTM D 1557, UNO.
6. SEE PLANS FOR THICKNESS OF ALL FLOOR SLABS. UNDERLAY ALL SLABS WITH AT LEAST A 4" THICK LAYER OF FREE-DRAINING GRANULAR MATERIAL. GRANULAR MATERIAL SHALL BE "PEA" GRAVEL OR 1" MINUS CLEAN GAP-GRADED GRAVEL.
7. BACKFILL AROUND FOUNDATION WALLS SHALL BE PERFORMED USING GRANULAR MATERIAL. CARE SHALL BE TAKEN IN PLACING BACKFILL MATERIALS SO AS NOT TO DAMAGE THE FOUNDATION. CONTRACTOR SHALL MONITOR BACKFILL OPERATIONS AS NEEDED.

GENERAL STRUCTURAL NOTES

1. GENERAL STRUCTURAL NOTES ARE INTENDED TO COMPLEMENT PROJECT STRUCTURAL PLANS AND PROJECT SPECIFICATIONS. SPECIFIC NOTES ON PLANS, DETAILS, AND SCHEDULES SHALL GOVERN OVER THE GENERAL NOTES.
2. TYPICAL DETAILS AND SECTIONS SHALL APPLY WHERE SPECIFIC DETAILS ARE NOT SHOWN.
3. DIMENSIONS SHOWN ON PLANS SHALL ARE FOR INFORMATION ONLY. CONSTRUCTION DRAWINGS SHALL NOT BE SCALED FOR DIMENSIONS FOR CONSTRUCTION OR SHOP DRAWINGS.
4. CHANGES TO THE CONTRACT DOCUMENTS MAY BE MADE ONLY BY WRITTEN AUTHORIZATION FROM AN AUTHORIZED REPRESENTATIVE OF J.M. WILLIAMS AND ASSOCIATES JMWA/AE URBIA. JMWA/AE URBIA SHALL BE HELD HARMLESS FOR ANY CLAIMS ARISING DIRECTLY OR INDIRECTLY FROM CHANGES MADE WITHOUT WRITTEN AUTHORIZATION FROM AN AUTHORIZED REPRESENTATIVE OF JWMA/AE URBIA.
5. CONTRACTOR IS RESPONSIBLE TO VERIFY ALL DIMENSIONS, ELEVATIONS, AND SITE CONDITIONS PRIOR TO CONSTRUCTION/FABRICATION AND SHALL IMMEDIATELY NOTIFY ARCHITECT/ENGINEER OF ANY DISCREPANCIES.
6. THE STRUCTURAL DRAWINGS SHALL NOT BE CONSIDERED ALL INCLUSIVE AND DO NOT CONTAIN ALL DIMENSIONS, ELEVATIONS, AND OPENINGS, NEEDED FOR CONSTRUCTION. IT IS THE RESPONSIBILITY OF THE CONTRACTOR TO COORDINATE WITH ARCHITECTURAL DRAWINGS, SITE CONDITIONS, AND OTHER TRADES INCLUDING BUT NOT LIMITED TO ARCHITECTURAL, MECHANICAL, CIVIL, ELECTRICAL, AND PLUMBING.
7. THE CONTRACTOR SHALL NOTIFY THE ARCHITECT AND/OR ENGINEER OF ANY DISCREPANCIES, OMISSIONS OR CONFLICTS BETWEEN THE VARIOUS ELEMENTS OF THE CONSTRUCTION DOCUMENTS, SPECIFICATIONS, AND EXISTING CONDITIONS BEFORE PROCEEDING WITH THE CONSTRUCTION/FABRICATION OF ANY AFFECTED ELEMENTS. IN CASE OF CONFLICT, THE MOST STRINGENT REQUIREMENTS AS DIRECTED BY THE ARCHITECT/ENGINEER SHALL GOVERN AND BE PERFORMED AT NO ADDITIONAL COST TO THE OWNER.
8. THE CONTRACTOR SHALL SUBMIT A WRITTEN REQUEST TO THE ARCHITECT/ENGINEER BEFORE PROCEEDING WITH ANY CHANGES, SUBSTITUTIONS, OR MODIFICATIONS. ANY CONSTRUCTION, FABRICATION, OR INSTALLATION PERFORMED BEFORE RECEIVING THE ARCHITECT/ENGINEERS WRITTEN APPROVAL WILL BE AT THE CONTRACTOR'S RISK/EXPENSE.
9. THE CONTRACTOR SHALL COORDINATE THE WORK PERFORMED BY ALL TRADES AND IS ULTIMATELY RESPONSIBLE FOR COMPLIANCE WITH CONTRACT DOCUMENTS AND CODE REQUIREMENTS. THE CONTRACTOR SHALL MEET ALL NOTED REQUIREMENTS AND SHALL INCLUDE THE ASSOCIATED COSTS IN THEIR RESPECTIVE BID.
10. THE CONTRACTOR IS RESPONSIBLE TO COORDINATE WITH ALL TRADES AND SHALL NOTIFY ENGINEER OF SIZE AND LOCATION OF ANY EQUIPMENT OR OTHER ADDITIONAL LOADS NOT SHOWN ON STRUCTURAL PLANS OR TYPICAL DETAILS BEFORE CONSTRUCTION/FABRICATION.
11. FAILURE TO FOLLOW PLANS AND CONSTRUCTION DOCUMENTS CONSTITUTES CHANGE IN PROJECT SCOPE. THE ENGINEER RESERVES THE RIGHT TO REQUEST REPLACEMENT OF ANY PORTION OF THE STRUCTURE DEVIATING FROM THE PLANS WHERE WRITTEN APPROVAL HAS NOT BEEN OBTAINED. DEVIATION FROM CONSTRUCTION DOCUMENTS WITHOUT WRITTEN APPROVAL RELIEVES ENGINEER OF ALL LIABILITY, AND CONTRACTOR ASSUMES FULL LIABILITY. STRUCTURE DEVIATING FROM THE PLANS WHERE WRITTEN APPROVAL HAS NOT BEEN OBTAINED.
12. STRUCTURAL ELEMENTS SHALL NOT BE CUT FOR PIPES, DUCTS, SLEEVES, ETC. UNLESS NOTED OTHERWISE IN THE PLANS AND TYPICAL DETAILS. THE CONTRACTOR SHALL OBTAIN WRITTEN APPROVAL FROM THE ARCHITECT/ENGINEER FOR INSTALLATION OF ANY ADDITIONAL PIPES, DUCTS, OPENINGS, ETC NOT EXPLICITLY SHOWN ON CONTRACT DOCUMENTS.
13. THE CONTRACTOR IS RESPONSIBLE FOR THE MEANS AND METHODS OF CONSTRUCTION.
14. THE CONTRACTOR SHALL BE RESPONSIBLE FOR ALL TEMPORARY SHORING AND BRACING AS NECESSARY. SHORING AND SUPPORT BEAMS SHALL SUPPORT ALL LOADS TO WHICH THE STRUCTURE MAY BE SUBJECTED (I.E. WIND, CONSTRUCTION LOADING, ETC.). SHORING SHALL REMAIN IN PLACE AS LONG AS SAFETY REQUIRES AND/OR UNTIL ALL THE STRUCTURAL ELEMENTS ARE IN PLACE AND CONNECTED AS REQUIRED IN THE CONTRACT DOCUMENTS.
15. DURING AND AFTER CONSTRUCTION, THE LOADS IMPOSED ON THE STRUCTURE BY THE CONTRACTOR AND OWNER SHALL BE WITHIN THE LIMITS OF THE OCCUPANCY DESIGN LOADS. SEE STRUCTURAL PLANS AND CALCULATIONS FOR THE OCCUPANCY DESIGN LOADINGS AND CRITERIA.
16. THE CONTRACTOR SHALL BE RESPONSIBLE FOR SAFETY AND PROTECTION WITHIN AND ADJACENT TO THE JOB SITE.
17. VISITS TO THE JOB SITE BY REPRESENTATIVES OF JMWA/AE URBIA DO NOT CONSTITUTE APPROVAL OR SPECIAL INSPECTION OF THE WORK PERFORMED BY THE CONTRACTOR OR HIS SUBCONTRACTORS.
18. JMWA/AE URBIA SHALL RECEIVE COPIES OF ALL SPECIAL INSPECTION REPORTS COMPLETED BY THE REVIEWING AUTHORITY OR THIRD PARTY REGARDING STRUCTURAL ITEMS LISTED FOR SPECIAL INSPECTION.
19. JMWA/AEURBIA IS NOT RESPONSIBLE FOR THE COST OF CONSTRUCTION NOR PROJECT BUDGETS. ANY STRUCTURAL CHANGES REQUIRED BY THE CONTRACTOR, OWNER OR ARCHITECT SHALL BE INVOICED BY JMWA/AEURBIA AND TREATED AS ADDITIONAL SERVICES.
20. JMWA/AEURBIA SHALL BE COMPENSATED FOR ADDITIONAL ENGINEERING REQUIRED AS A RESULT OF ANY THIRD PARTY OR CITY REVIEW, PROVIDED ORIGINAL DESIGN COMPLIES WITH CURRENT BUILDING CODE.
21. OMISSIONS IDENTIFIED DURING PLAN REVIEW OR CONSTRUCTION SHALL BE ENGINEERED BY THE ENGINEER OF RECORD AT NO ADDITIONAL COST TO THE OWNER. THE OWNER SHALL BE RESPONSIBLE FOR PAYMENT OF OMISSIONS THROUGH AN APPROVED CHANGE ORDER.
22. REVIEW OF SHOP DRAWING SUBMITTAL ITEMS BY JMWA/AE URBIA SHALL BE FOR GENERAL COMPLIANCE WITH THE INFORMATION GIVEN IN THE CONTRACT DOCUMENTS AND IS NOT INTENDED FOR APPROVAL. SHOP DRAWING REVIEW DOES NOT RELIEVE THE CONTRACTOR FROM THE RESPONSIBILITY OF COMPLETING THE PROJECT ACCORDING TO CONTRACT DOCUMENTS.
23. STRUCTURAL SHOP DRAWINGS SHALL BE APPROVED BY THE ENGINEER AND ARCHITECT OF RECORD PRIOR TO FABRICATION AND ERECTION.
24. THE FOLLOWING LIST INCLUDES, BUT IS NOT LIMITED TO, SPECIFIC ITEMS FOR WHICH SHOP DRAWING SUBMITTALS SHALL BE SUBMITTED BY THE CONTRACTOR TO THE ARCHITECT/ENGINEER FOR REVIEW PRIOR TO FABRICATION/INSTALLATION:
    A. CONCRETE MIX DESIGN
    B. STRUCTURAL STEEL
    C. WOOD BEAMS & JOISTS

CONCRETE NOTES

1. ALL WORK SHALL BE IN STRICT ACCORDANCE WITH THE IBC, LOCAL ORDINANCES, AND THE MOST CURRENTLY ADOPTED VERSION OF THE AMERICAN CONCRETE INSTITUTE (ACI) ACI 318.
2. CONTRACTOR SHALL COORDINATE OPENINGS, BLOCK OUTS, CURBS, DOWELS, SLEEVES, CONDUITS, BOLTS, AND ANY OTHER EMBEDDED ITEMS WITH MECHANICAL, ELECTRICAL, AND ARCHITECTURAL PRIOR TO PLACING CONCRETE.
3. NO OPENINGS, PIPES, DUCTS, SLEEVES, ETC. SHALL BE PLACED IN STRUCTURAL CONCRETE INCLUDING BUT NOT LIMITED TO WALLS, BEAMS, COLUMNS, FOOTINGS, GRADE BEAMS AND SUSPENDED SLABS (INCLUDED CONCRETE OVER METAL DECK) UNLESS SPECIFICALLY DETAILED OR WRITTEN APPROVAL IS GIVEN BY ENGINEER. FOOTINGS SHALL BE STEPPED TO AVOID PIPING UNLESS OTHERWISE DETAILED.
4. CONTRACTOR SHALL BE RESPONSIBLE FOR PROPER PLACEMENT OF ALL ANCHOR BOLTS, SEISMIC ANCHORS OR STRAPS, ETC... INSTALL PER MANUFACTURER'S SPECIFICATIONS.
5. THE CONTRACTOR SHALL BE RESPONSIBLE FOR THE DESIGN, DETAILING, CARE, PLACEMENT AND REMOVAL OF ALL FORMWORK AND SHORES. DO NOT REMOVE FORMS AND SHORING UNTIL STRUCTURAL MEMBERS ACQUIRE SUFFICIENT STRENGTH TO BE SELF-SUPPORTING INCLUDING/IN ADDITION TO ANY RELEVANT CONSTRUCTION LOADS.
6. ONLY ONE GRADE OR TYPE OF CONCRETE SHALL BE POURED ON-SITE AT ANY GIVEN TIME.
7. CONTRACTOR SHALL SEE CIVIL DRAWINGS AND PROJECT SPECIFICATIONS FOR ADDITIONAL SITE CONCRETE REQUIREMENTS NOT GIVEN IN THIS SECTION.
8. CONSTRUCTION ACTIVITY OR STORAGE OF MATERIALS SHALL NOT TAKE PLACE ON NEWLY PLACED CONCRETE UNTIL CONCRETE HAS ACHIEVED 75% OF SPECIFIED CONCRETE STRENGTH OR 7-DAYS, WHICHEVER IS SOONEST. DAMAGED SLABS OR OTHER STRUCTURAL CONCRETE BECAUSE OF CONSTRUCTION ACTIVITIES SHALL BE REPAIRED OR REPLACED AT NO ADDITIONAL EXPENSE TO THE OWNER.
9. CONTRACTOR SHALL FOLLOW RECOMMENDATIONS IN ACI 305R FOR HOT WEATHER CONCRETE PLACEMENT AND ACI 306R FOR COLD WEATHER CONCRETE PLACEMENT.

CONCRETE MATERIALS

1. ALL CONCRETE ON SITE SHALL BE TYPE I/II CEMENT PER ASTM C150 FOR ALL CONCRETE
2. NO ALUMINUM CONDUIT, PRODUCT CONTAINING ALUMINUM, OR ANY OTHER MATERIAL THAT MAY BE INJURIOUS TO CONCRETE SHALL BE EMBEDDED IN CONCRETE.
3. MAXIMUM SLUMP OF CONCRETE IS EQUAL TO 4 INCHES PLUS OR MINUS 1 INCH.
4. CEMENTITIOUS MATERIALS AND AGGREGATES, UNO:
    A. MIXING WATER — ASTM C1602
    B. FLY ASH AND POZZOLAN — ASTM C618
    C. (25% MAX CEMENTITOUS CONTENT, TYP)
    D. NORMAL WEIGHT AGGREGATES — ASTM C 33
    E. LIGHT WEIGHT AGGREGATES — ASTM C330
    F. MAX AGGREGATE SIZE USED:
        i. 1/5 NARROWEST DIMENSION BTWN FORMS
        ii. 1/3 DEPTH OF THE SLAB
        iii. 3/4 THE MIN CLEAR SPACING BTWN BARS
5. ADMIXTURES WHEN USED, UNO:
    A. WATER REDUCING AND RETARDING ADMIXTURE — ASTM C494
    B. AIR ENTRAINING ADMIXTURES — ASTM C260
    C. CHLORIDE ION CORROSION PREVENTION — ASTM C1582
    D. CALCIUM CHLORIDE SHALL NOT BE ADDED TO CONCRETE MIX
    E. ADMIXTURES NOT MENTIONED AS PART OF THIS SECTION SHALL BE SUBMITTED TO ENGINEER FOR REVIEW BEFORE USE.

CONCRETE STRENGTH

CONCRETE SHALL BE SUPPLIED TO MEET THE FOLLOWING STRENGTH REQUIREMENTS AND REQUIREMENTS SPECIFIC TO THE EXPOSURE CLASSES INCLUDING LIMITS ON WATER/CEMENT RATIO AND AIR CONTENT PER ACI 318:

CONCRETE ELEMENT:	STRENGTH:	EXPOSURE CLASS:
FOOTINGS:	3000 PSI	(F0, S0, W0, C0)
INTERIOR SLABS ON GRADE:	3500 PSI	(F0, S0, W0, C0)

REINFORCEMENT & ANCHORAGE

1. REINFORCING STEEL
    A. TYPICAL REINFORCING BAR — ASTM 615 GRADE 60
        i. FIELD BENT DOWELS — ASTM 615 GRADE 40 (OPTIONAL)
2. ANCHOR BOLTS:
    A. TYPICAL:
        i. ANCHOR BOLTS: — ASTM F1554 GRADE 36
        ii. NUTS: — ASTM A563 NUTS AND
        iii. HARDENED WASHERS: — ASTM GR 36 F436 (5/16" THICK UNO)
3. ALL SPLICES IN REINFORCING BARS SHALL MEET THE REQUIREMENTS OF "REINFORCING LAP SPLICE SCHEDULE".
4. DO NOT SPLICE STIRRUPS AND TIES. DO NOT SPLICE VERTICAL BARS IN RETAINING WALLS UNLESS SPECIFICALLY SHOWN IN DETAILS.
5. MECHANICAL SPLICES SHALL BE POSITIVE CONNECTING COUPLERS AND SHALL MEET ALL APPLICABLE CODE REQUIREMENTS. ADJACENT MECHANICAL SPLICES SHALL BE STAGGERED A MINIMUM OF 24 INCHES ALONG THE REINFORCING BARS. TENSILE CAPACITY OF MECHANICAL SPLICES SHALL BE 125% OF THE SPLICED BAR.
6. ALL REINFORCING STEEL SHALL BE DETAILED AND PLACED PER THE ACI DETAILING MANUAL AND ACI STANDARDS.
7. CONCRETE TO BE MECHANICALLY CONSOLIDATED DURING PLACEMENT PER ACI STANDARDS.
8. USE CHAIRS OR OTHER SUPPORT DEVICES RECOMMENDED BY THE CRSI TO SUPPORT AND TIE REINFORCEMENT BARS AND WWF PRIOR TO PLACING CONCRETE. WWF SHALL BE ADEQUATELY SUPPORTED ABOVE GRADE OR DECK. IT IS RECOMMENDED THAT CONTINUOUS SUPPORTS ARE PLACED AT 36" O.C. MAXIMUM.
9. LIFTING OF REINFORCING OFF GRADE OR DECK DURING PLACEMENT OF CONCRETE IS NOT PERMITTED.
10. REINFORCING STEEL AND EMBEDS SHALL BE PROPERLY TIED INTO PLACE PRIOR TO PLACING CONCRETE.
11. HORIZONTAL REINFORCEMENT SHALL BE CONTINUOUS THROUGH CONSTRUCTION AND CONTROL JOINTS OR PROVIDE REINFORCING DOWELS TO MATCH MEMBER REINFORCING, UNO.
12. PROVIDE CORNER BARS AT INTERSECTING WALL CORNERS USING THE SAME BAR SIZE AND SPACING AS THE HORIZONTAL WALL REINFORCING, SEE DETAILS.
13. DO NOT WELD REINFORCING BARS. DO NOT SUBSTITUTE REINFORCING BARS FOR DEFORMED BAR ANCHORS OR HEADED STUD ANCHORS.
14. SEE ACI 315 FOR ADDITIONAL DETAILING REQUIREMENTS FOR REINFORCING.
15. CAST-IN-PLACE REINFORCEMENT SHALL HAVE THE FOLLOWING CLEAR COVER:
    A. CAST AGAINST/PERMANENTLY EXPOSED TO EARTH — 3"
    B. FORMED CONCRETE EXPOSED TO EARTH/WEATHER:
        i. #6 THRU #18 BARS — 2"
        ii. #5 AND SMALLER BARS — 1-1/2"
    C. CONCRETE NOT EXPOSED EARTH/WEATHER:
        i. SLABS, WALLS, JOISTS (#11 AND SMALLER) — 3/4"
        ii. BEAMS, COLUMNS, TIES, STIRRUPS — 1-1/2"

FOOTINGS

1. SEE FOOTING SCHEDULE AND DETAILS FOR SIZE AND REINFORCING REQUIREMENTS, TYP. INTERIOR FOOTINGS MAY BE MONOLITHIC WITH SLAB.

POST INSTALLED ANCHOR NOTES

1. ALL WORK SHALL BE IN STRICT ACCORDANCE WITH MANUFACTURER RECOMMENDATIONS FOR POST INSTALLED ANCHORS, ACI STANDARDS, AND MSJC SPECIFICATIONS.
2. POST-INSTALLED ANCHORS SHALL ONLY BE USED WHERE SPECIFICALLY CALLED FOR IN THE CONTRACT DOCUMENTS. IF POST-INSTALLED ANCHORS ARE DESIRABLE TO BE USED IN PLACE OF CAST-IN-PLACE ANCHORS, CONTRACTOR MUST SUBMIT FORMAL WRITTEN REQUEST TO ENGINEER FOR APPROVAL PRIOR TO INSTALLATION.
3. ANY USE OF POST-INSTALLED ANCHORS FOR RETROFIT OR PLACEMENT/REPLACEMENT OF MISSING ANCHORS INTENDED TO BE CAST-IN-PLACE MUST FIRST BE APPROVED IN WRITING FROM THE ENGINEER.
4. CONTRACTOR SHALL FOLLOW ICC EVALUATION REPORTS AND ALL MANUFACTURERS RECOMMENDATIONS AND REQUIREMENTS FOR INSTALLATION OF ALL POST-INSTALLED ANCHORS.
5. REFER TO MANUFACTURERS RECOMMENDATIONS FOR HOLE DRILLING AND PREPARATION. DRILLED HOLES MUST BE COMPLETELY DRY AND FREE OF DUST, DEBRIS, AND STANDING WATER.
6. REFER TO DETAILS OR CONTACT ENGINEER OF RECORD FOR EMBEDMENT DEPTH, ANCHOR DIAMETER, ANCHOR MATERIAL, AND ACCEPTABLE FASTENING TYPE (ADHESIVE, MECHANICAL, SCREW, ETC).
7. ALTERNATIVE ANCHORS NOT LISTED AS PART OF THIS SECTION MAY BE SUBMITTED FOR REVIEW TO THE ENGINEER BY THE CONTRACTOR. THE CONTRACTOR MUST SUBMIT CALCULATIONS AND ASSOCIATED ICC REPORTS FOR THE REQUESTED ALTERNATIVE TO THE ENGINEER FOR REVIEW PRIOR TO USE.

ADHESIVE ANCHORS AND DOWELS IN CONCRETE

1. ALL ADHESIVE ANCHORS SHALL BE INSTALLED IN CONCRETE HAVING A MINIMUM AGE OF 21 DAYS AT THE TIME OF INSTALLATION OR UNTIL CONCRETE HAS ACHIEVED FULL DESIGN STRENGTH.
    A. OBTAIN WRITTEN APPROVAL FROM ENGINEER FOR INSTALLATION PRIOR TO THE 21-DAY PERIOD.
2. PERMITTED CONCRETE ADHESIVES:
    A. HILTI HIT RE-500-V3 (ICC ESR-3814)
    B. SIMPSON SET-3G (ICC ESR-4057)
3. INSTALL EPOXY/ADHESIVE AND ANCHORS OR DOWELS PER MANUFACTURER'S SPECIFICATIONS AND RECOMMENDATIONS INCLUDING TEMPERATURE RANGES, DRILLING, AND HOLE CLEANING.
4. CONTRACTOR TO ENSURE THAT EPOXY IS USED PRIOR TO THE MANUFACTURER GIVEN EXPIRATION DATE AND HAS BEEN STORED PER THE RECOMMENDATIONS FROM THE MANUFACTURER. DO NOT USE EPOXY THAT HAS BEEN EXPOSED TO EXTREME HEAT OR FREEZE-THAW.
5. UNLESS NOTED OTHERWISE, MINIMUM EMBEDMENT OF EPOXIED ANCHORS SHALL COMPLY WITH "POST-INSTALLED ANCHOR EMBEDMENT" SCHEDULE.

EXPANSION ANCHORS

1. ALL ANCHORS SHALL BE INSTALLED IN CONCRETE HAVING A MINIMUM AGE OF 7-DAYS AT THE TIME OF INSTALLATION OR UNTIL CONCRETE HAS ACHIEVED FULL DESIGN STRENGTH.
    A. OBTAIN WRITTEN APPROVAL FROM ENGINEER FOR INSTALLATION PRIOR TO THE 7-DAY PERIOD.
2. PERMITTED CONCRETE ANCHORS:
    A. HILTI KWIK BOLT TZ (ICC-ES ESR-1917)
    B. SIMPSON STRONG-BOLT 2 (ICC-ES ESR-3037)

SCREW ANCHORS

1. ALL ADHESIVE ANCHORS SHALL BE INSTALLED IN CONCRETE HAVING A MINIMUM AGE OF 7 DAYS AT THE TIME OF INSTALLATION OR UNTIL CONCRETE HAS ACHIEVED FULL DESIGN STRENGTH.
    A. OBTAIN WRITTEN APPROVAL FROM ENGINEER FOR INSTALLATION PRIOR TO THE 21-DAY PERIOD.
2. PERMITTED CONCRETE ANCHORS:
    A. TITEN HD (ICC-ES ESR-2713)
    B. KWIK HUS-EZ (ICC-ES ESR-3027)

STRUCTURAL STEEL NOTES

1. ALL WORK TO BE IN STRICT ACCORDANCE WITH THE IBC, LOCAL ORDINANCES, AND THE MOST CURRENTLY ADOPTED VERSION OF THE FOLLOWING DESIGN SPECIFICATIONS:
    A. AISC 360 "SPECIFICATION FOR THE DESIGN, FABRICATION, AND ERECTION OF STRUCTURAL STEEL FOR BUILDINGS" WITH "COMMENTARY"
    B. AISC 341 "SEISMIC PROVISIONS FOR STRUCTURAL STEEL BUILDINGS"
    C. AISC 303 "CODE OF STANDARD PRACTICE" EXCLUDING: SECTIONS 3.2, 4.4, 4.4.1.
    D. AISC "SPECIFICATION FOR STRUCTURAL JOINTS USING ASTM A325 OR A490 BOLTS", AND "SEISMIC PROVISION FOR STRUCTURAL BUILDINGS".
    E. AWS "STRUCTURAL WELDING CODE", EXCEPT AS MODIFIED BY THE REQUIREMENTS GIVEN BY AISC.
2. ALL DIMENSIONS AND CONDITIONS SHALL BE VERIFIED BY THE CONTRACTOR PRIOR TO FABRICATION AND ERECTION.
3. SEE ARCHITECTURAL SHEETS FOR DIMENSIONS, ELEVATIONS, ACCESS HATCHES, DRAFT STOPS, ETC.
4. SEE ARCHITECTURAL, MECHANICAL, AND ELECTRICAL FOR ADDITIONAL STEEL MEMBERS (BRACKETS, ANGLES, ETC...) WHERE REQUIRED.
5. ALL STEEL SHALL BE PROPERLY PRIMED EXCEPT AREAS THAT REQUIRE FIELD WELDING OR THAT WILL RECEIVE SPRAY-ON FIREPROOFING.
6. ALL FAYING SURFACES MUST BE PROPERLY PREPARED FOR CONNECTION AND BE FREE OF RUST/CORROSION.
7. ALL EXPOSED EXTERIOR STEEL ELEMENTS SHALL BE HOT-DIPPED GALVANIZED. CONTRACTOR TO COORDINATE WITH ARCHITECT BEFORE FABRICATION.
8. STANDARD PENETRATIONS THROUGH STRUCTURAL MEMBERS FOR MECHANICAL, PLUMBING, ELECTRICAL SYSTEMS, ETC. SHALL BE PROVIDED ON THE CENTERLINE OF THE MEMBER'S DEPTH AND WITHIN THE MIDDLE ONE-THIRD OF THE SPAN. ALL PENETRATIONS MUST BE SHOWN IN SHOP-DRAWINGS. NO FIELD-CUT PENETRATIONS ARE PERMITTED WITHOUT WRITTEN APPROVAL FROM JMWA/AEURBIA.
9. REFER TO ARCHITECTURAL DRAWINGS FOR STEEL FIREPROOFING REQUIREMENTS.

MATERIALS

1. WIDE FLANGE SECTIONS: — ASTM A992 (50 KSI)
2. SHAPES AND PLATES:
    A. TYPICAL — ASTM A36
3. HSS (SQUARE, RECTANGULAR): — ASTM A500 GRADE C (50 KSI)
4. NON-SHRINK GROUT — ASTM C1107 GRADE B (7500 PSI MIN)
5. BOLTED CONNECTIONS (TYPICAL):
    A. TYPICAL BOLTS (3/4" DIA UNO): — ASTM F3125 A325
    B. NUTS: — ASTM A563 NUTS
    C. HARDENED WASHERS: — ASTM F436
6. WELDS (TYPICAL):
    C. E70 XX AT ALL JOISTS
    D. E60 XX AT ALL DECKS
    E. E70 XX AT ALL OTHER LOCATIONS

WELDING

1. ALL WELDS AND BOLTING TO MEET APPROVAL OF SPECIAL INSPECTOR AS REQUIRED BY BUILDING OFFICIAL.
2. ALL WELDING AND CUTTING SHALL BE PERFORMED BY AWS CERTIFIED WELDERS.
3. WELDS MAY BE PERFORMED IN THE SHOP OR IN THE FIELD. DESIGNATIONS IN THE CONTRACT DOCUMENTS ARE SHOWN ONLY TO ASSIST THE CONTRACTOR IN THE BIDDING PROCESS. AT THE DISCRETION OF THE CONTRACTOR FIELD WELDS MAY BE SUBSTITUTED FOR SHOP WELDS AND FIELD WELDS FOR SHOP WELDS. THE CONTRACTOR SHALL COORDINATE THE WELDING SEQUENCE BETWEEN SUB-CONTRACTORS AND FABRICATORS. CONTRACTOR IS TO VERIFY THAT SEQUENCE OF WELDING CONFORMS WITH APPLICABLE CODES AND REQUIREMENTS PER THE CONTRACT DOCUMENTS.
4. WHERE CONNECTIONS ARE NOT SPECIFIED (IF ANY), CONTRACTOR SHALL SUBMIT CONNECTION DETAIL FOR APPROVAL TO AEURBIA/JMWA PRIOR TO FABRICATION.
5. FIELD WELDING OF CONNECTIONS INTENDED TO BE BOLTED IS NOT PERMITTED WITHOUT PRIOR WRITTEN CONSENT FROM AEURBIA/JMWA.
6. DO NOT WELD REBAR OR ANCHOR BOLTS, INCLUDING "TACK" WELDS.

BOLTED CONNECTIONS

1. TIGHTEN BOLTS BY THE TURN OF THE NUT, CALIBRATED WRENCH, OR DIRECT TENSION INDICATOR METHOD.
2. USE HARDENED WASHERS BENEATH THE TURNED ELEMENT OF ALL BOLTS OR NUTS. HARDENED BEVELED WASHERS MAY ALSO BE USED TO COMPENSATE FOR THE LACK OF PARALLELISM.
3. PROVIDE HARDENED WASHERS BENEATH THE HEAD AND NUT WHERE A490 BOLTS ARE SPECIFIED PER AISC REQUIREMENTS.
4. HARDENED WASHERS AND PLATES AT OVERSIZED HOLES SHALL CONFORM TO ASTMF-436 AND SHALL COMPLETELY COVER THE SLOT AFTER INSTALLATION.
5. DO NOT REUSE BOLTS, NUTS OR WASHERS.
6. SEE TYPICAL BOLT SCHEDULE FOR BOLT SIZES AND TYPICAL BOLTED CONNECTIONS. PROVIDE A STANDARD AISC FRAMED CONNECTION FOR ONE HALF THE BEAM'S TOTAL UNIFORM LOAD CAPACITY WHERE A CONNECTION IS NOT SHOWN.
7. PROVIDE FULL-DEPTH STIFFENER PLATES AT EACH SIDE OF ALL BEAMS AT ALL BEARING POINTS. STIFFENER PLATE THICKNESS EQUALS THE BEAM WEB THICKNESS (1/4" MIN.). FILLET WELD BOTH SIDES OF STIFFENER, ALL AROUND.

WOOD FRAMING NOTES

1. ALL WORK TO BE IN STRICT ACCORDANCE WITH THE IBC, THE MOST CURRENTLY ADOPTED VERSION OF THE NATIONAL DESIGN SPECIFICATION FOR WOOD CONSTRUCTION (NDS), AND LOCAL ORDINANCES.
2. THE CONTRACTOR SHALL NOT CUT, CORE, NOTCH, OR MITER ANY STRUCTURAL MEMBER THAT IS NOT SHOWN IN STRUCTURAL DETAILS OR WITHOUT PRIOR WRITTEN CONSENT FROM JMWA/AEURBIA.
3. ALL BUILDING SYSTEMS AND FINISHES SHALL BE DESIGNED TO ACCOMMODATE A 3/16" WOOD SHRINKAGE PER FLOOR.

MATERIALS

1. FASTENERS
    A. NAILS
        i. ALL NAILS SPECIFIED IN PLANS AND DETAILS SHALL CONFORM WITH TOLERANCES SPECIFIED IN ASTM F1667.
        ii. ALL NAILS SHALL BE COMMON NAILS UNLESS NOTED OTHERWISE. OTHER NAIL TYPES ARE NOT PERMITTED WITHOUT PRIOR WRITTEN CONSENT FROM JMWA/AEURBIA.
2. FRAMING LUMBER
    A. ALL FRAMING LUMBER SHALL BE #2 DOUGLAS FIR-LARCH OR BETTER, UNO.
3. ENGINEERED LUMBER
    A. WOOD I-JOISTS: SHALL BE TJI (BY WEYERHAUSER) OR EQUIVALENT, AND SHALL BE INSTALLED PER MANUFACTURER'S RECOMMENDATIONS AND SPECIFICATIONS.
        i. IF A DIFFERENT MANUFACTURER THAN WHAT IS SPECIFIED ON THE PLANS IS DESIRED THE CONTRACTOR SHALL SUBMIT DRAWINGS AND CALCULATIONS FOR ENGINEER REVIEW BEFORE CONSTRUCTION THAT CLEARLY INDICATE THE DESIGN LOADS AND OPENINGS AS SHOWN PER THE DETAILS AND STRUCTURAL DRAWINGS.LAMINATED VENEER LUMBER (LVL): SHALL BE MICRO-LAM 1.9E BY TRUS-JOIST CORPORATION, VERSA-LAM 2.0E BOISE CASCADE CORPORATION, REDLAM 2.0E BY RED BUILT, SOLIDSTART LVL 2.0E BY LP CORPORATION OR RIGIDLAM 2.0E BY ROSEBURG.
    B. GLUE-LAMINATED TIMBER (GLULAM):
        i. SIMPLE SPANS 24F-V4 DF/DF.
        ii. CONTINUOUS SPANS AND CANTILEVERS SHALL BE 24F-V8 DF/DF.
        iii. DO NOT INSTALL GLU-LAMINATED BEAMS UPSIDE DOWN.
    C. LAMINATED VENEER LUMBER (LVL):
        i. AND THE LIKE SHALL BE INSTALLED PER MANUFACTURER'S RECOMMENDATIONS AND SPECIFICATIONS.
        ii. SHALL BE DESIGNATED AS 1.9E MINIMUM.
    D. ENGINEERED LUMBER, WITH THE EXCEPTION OF GLU-LAMINATED LUMBER, SHALL NOT BE USED IN EXTERIOR APPLICATIONS.
4. SHEATHING
    A. FLOOR SHEATHING:
        i. THICKNESS: 5/8" APA EXP. 1 RATED SHEATHING OR EQUAL
        ii. SPAN RATING (40/20)
    B. WALL SHEATHING:
        i. THICKNESS: 5/8" APA EXP. 1 RATED SHEATHING OR EQUAL
        ii. SPAN RATING (40/20)
    C. AT FLOOR DIAPHRAGMS:
        i. PANEL EDGE NAILING IS TO INCLUDE DRAG STRUTS, TENSION CHORDS, BLOCKING OVER BEARING/SHEAR WALLS, AND ANY OTHER SPECIAL DIAPHRAGM MEMBERS NOTED ON PLANS.
    D. AT SHEAR WALLS:
        i. PANEL EDGE NAILING IS TO INCLUDE TOP AND BOTTOM PLATES, END POSTS, ALL VERTICAL ELEMENTS @ HOLDOWN ANCHORS, AND HORIZONTAL BLOCKING.
        ii. ALL PANEL EDGES MUST BE BLOCKED.
        iii. PROVIDE 2 X SHAPED BLOCKING AT RIDGES UNLESS A CONTINUOUS MEMBER EXISTS. PANEL EDGES ARE UNBLOCKED UNLESS NOTED OTHERWISE ON THE STRUCTURAL PLANS.

COLUMNS

1. ALL COLUMNS SHALL EXTEND DOWN THROUGH THE STRUCTURE TO THE FOUNDATION.
2. COLUMNS SHALL BE BRACED AT EACH FLOOR LEVEL.
3. POSTS SHALL BE DOUGLAS FIR-LARCH NO. 1 OR EQUAL.
4. BEARING POINTS OF COLUMNS ARE TO BE SUPPORTED BY ADDITIONAL BUILT-UP BLOCKING AT JOISTS AND RAFTERS EQUAL TO THE NUMBER OF PLYS IN POST OR EQUAL TO WIDTH OF POST. BLOCKING SHALL BE CONSTRUCTED USING RIM BOARD MATERIAL OR SOLID SAWN LUMBER.

STRUCTURAL CONNECTIONS

1. THE CONTRACTOR IS ULTIMATELY RESPONSIBLE TO PROVIDE ADEQUATE STRUCTURAL CONNECTIONS. CONNECTIONS MUST CARRY THE BEARING CAPACITY OF THE MEMBER AND ANY UPLIFT OR SEISMIC FORCES GENERATED IN THE MEMBER. SPECIAL CONSIDERATION SHALL BE GIVEN TO PREVENT CRUSHING OF THE MEMBER AT BEARING, SPLITTING AND / OR CRACKING OF THE WOOD, ETC.
2. PRIOR WRITTEN APPROVAL FROM JMWA IS REQUIRED FOR ANY DEVIATION FROM THE CONSTRUCTION DOCUMENTS. JMWA IS NOT RESPONSIBLE FOR CONNECTIONS NOT APPROVED PRIOR TO CONSTRUCTION OR INSTALLATION.
3. PROVIDE SIMPSON CONNECTIONS OR EQUAL IF CONNECTION DETAILS ARE NOT PROVIDED IN THE CONSTRUCTION DOCUMENTS. INSTALL PER MANUFACTURERS RECOMMENDATIONS. REQUEST ADDITIONAL ASSISTANCE FROM JMWA IF NON-STANDARD CONNECTIONS ARE REQ'D.
4. ALL STRUCTURAL MEMBERS SHALL HAVE 1 3/4" BEARING (MINIMUM).
5. SEE SCHEDULES AND THE IBC FOR ADDITIONAL NAILING REQUIREMENTS

BLOCKING, BRIDGING, MISCELLANEOUS.

1. ALL JOISTS AND RAFTERS SHALL HAVE FULL-HEIGHT SOLID BLOCKING AT THEIR BEARING POINTS. CONNECT EACH BLOCK TO THE TOP OF EXTERIOR WALLS WITH SIMPSON A34 CLIPS (U.N.O.). EACH RAFTER AND/OR ROOF TRUSS SHALL BE ANCHORED WITH SIMPSON H1 ANCHORS AT EACH END.
2. I-JOISTS USED AS JOISTS AND RAFTERS SHALL HAVE FULL-HEIGHT SOLID BLOCKING AT THEIR BEARING POINTS. CONNECT EACH BLOCK TO THE TOP OF EXTERIOR WALLS WITH SIMPSON A34 CLIPS (U.N.O.). EVERY OTHER I-JOIST RAFTER SHALL BE ANCHORED WITH A SIMPSON H3 CLIP.
3. INSTALL BRIDGING AT THE MID-SPAN OF ALL FLOOR JOISTS AND/OR AT 8'-0 O.C. (WHICHEVER IS SMALLER). INSTALLATION SHALL BE PER MANUFACTURER'S RECOMMENDATIONS AND SPECIFICATIONS TO AVOID EXCESSIVE FLOOR VIBRATION AND/OR SQUEAKING.
4. STANDARD PENETRATIONS THROUGH STRUCTURAL MEMBERS FOR MECHANICAL, PLUMBING, ELECTRICAL SYSTEMS, ETC. SHALL BE PROVIDED ON THE CENTERLINE OF THE MEMBER'S DEPTH AND WITHIN THE MIDDLE ONE-THIRD OF THE SPAN. LARGER THAN STANDARD PENETRATIONS ARE NOT PERMITTED WITHOUT PRIOR APPROVAL.

aeurbia
architects and engineers
909 West South Jordan Parkway
south jordan , utah 84095
phone: 801.746.0456 - fax: 801.575.6456
webpage: aeurbia.com

No. 11866339
TYSON ALDER
12/02/2022

VELOCIRAX TI
LEHI BUSINESS PARK
850 EAST MILL POND DRIVE LEHI, UTAH

Revision Schedule

MARK	DESCRIPTION	Revision Date

AE2021.415

GENERAL STRUCTURAL NOTES

DATE: 12/02/2022

PERMIT SET

SHEET #:

S001

SPECIAL INSPECTION SCHEDULE

ESTABLISHED PER 2018 IBC

STATEMENT OF SPECIAL INSPECTION (1704.3)

ACCORDING TO CHAPTER 17 OF THE IBC, SPECIAL INSPECTION AND QUALITY ASSURANCE SHALL BE PROVIDED BY AN APPROVED AGENCY OR AGENCIES AS EMPLOYED BY THE OWNER, PRIOR TO THE START OF THE CONSTRUCTION. THE APPROVED AGENCIES SHALL PROVIDE WRITTEN DOCUMENTATION TO THE BUILDING OFFICIAL DEMONSTRATING COMPETENCE AND RELEVANT EXPERIENCE OR TRAINING OF THE SPECIAL INSPECTORS WHO WILL PERFORM THE SPECIAL INSPECTIONS AND TESTS DURING CONSTRUCTION. THE CONSTRUCTION OR WORK REQUIRING SPECIAL INSPECTION SHALL REMAIN ACCESSIBLE AND EXPOSED FOR SPECIAL INSPECTION OR TESTING PURPOSES UNTIL THE REQUIRED SPECIAL INSPECTION OR TESTS ARE COMPLETE. THE SPECIAL INSPECTOR SHALL OBSERVE THE WORK FOR CONFORMANCE WITH THE CONTRACT DOCUMENTS. APPROVED AGENCIES SHALL KEEP RECORDS OF SPECIAL INSPECTIONS AND TESTS. THE APPROVED AGENCY SHALL SUBMIT REPORTS OF SPECIAL INSPECTIONS AND TESTS TO THE BUILDING OFFICIAL, CONTRACTOR, AND TO THE REGISTERED ARCHITECT AND ENGINEER IN RESPONSIBLE CHARGE. REPORTS SHALL INDICATE THAT WORK INSPECTED OR TESTED WAS OR WAS NOT COMPLETED IN CONFORMANCE TO APPROVED CONSTRUCTION DOCUMENTS. DISCREPANCIES SHALL BE BROUGHT TO THE IMMEDIATE ATTENTION OF THE CONTRACTOR FOR CORRECTION. IF THEY ARE NOT CORRECTED, THE DISCREPANCIES SHALL BE BROUGHT TO THE ATTENTION OF THE BUILDING OFFICIAL AND TO AND TO THE REGISTERED ARCHITECT AND ENGINEER IN RESPONSIBLE CHARGE PRIOR TO THE COMPLETION OF THAT PHASE OF THE WORK. A FINAL REPORT DOCUMENTING REQUIRED SPECIAL INSPECTIONS AND TESTS, AND CORRECTION OF ANY DISCREPANCIES NOTED IN THE INSPECTIONS OR TESTS, SHALL BE SUBMITTED AT A POINT IN TIME AGREED UPON PRIOR TO THE START OF WORK BY THE OWNER OR THE OWNER'S AUTHORIZED AGENT TO THE BUILDING OFFICIAL. SPECIAL INSPECTION IS REQUIRED FOR ALL ITEMS LISTED IN THE SPECIAL INSPECTION SCHEDULE.

SPECIAL INSPECTION NOTES

1. CONTINUOUS SPECIAL INSPECTION MEANS THE FULL-TIME OBSERVATION OF WORK REQUIRING SPECIAL INSPECTION BY AN APPROVED SPECIAL INSPECTOR WHO IS PRESENT IN THE AREA WHERE THE WORK IS BEING PERFORMED. PERIODIC SPECIAL INSPECTION MEANS THE PART-TIME OR INTERMITTENT OBSERVATION OF WORK REQUIRING SPECIAL INSPECTION BY AN APPROVED SPECIAL INSPECTOR WHO IS PRESENT IN THE AREA WHERE THE WORK HAS BEEN OR IS BEING PERFORMED AND AT THE COMPLETION OF THE WORK.
2. ANY CONSTRCTION OR MATERIAL THAT HAS FAILED INSPECTION SHALL BE SUBJECT TO REMOVAL AND REPLACEMENT.
3. EPOXY AND EXPANSION ANCHORS INTO MASONRY OR CONCRETE MAY BE USED ONLY WHEN APPROVED BY ARCHITECT AND / OR ENGINEER USING AN APPROVED PRODUCT WITH CURRENT PUBLISHED ICBO RESEARCH REPORT NUMBERS
4. SPECIAL INSPECTION OF SOILS SHALL REFERENCE THE APPROVED SOILS REPORT TO DETERMINE COMPLIANCE.
5. SPECIAL INSPECTIONS ARE NOT REQUIRED DURING PLACEMENT OF FILL LESS THAN 12 INCHES DEEP.
6. ALL WELDS SHALL BE VISUALLY INSPECTED (IBC 1704.3) AND SHALL BE IN COMPLIANCE WITH AWS D1.1.
7. ALL COMPLETE PENETRATION WELDS SHALL BE TESTED ULTRASONICALLY OR BY USING ANOTHER APPROVED METHOD (AISC 360 N5)
8. SLIP-CRITICAL CONNECTIONS MAY HAVE PERIODIC SPECIAL INSPECTION PROVIDED THAT THE TURN-OF-THE-NUT METHOD WITH MATCH MARKING TECHNIQUES IS USED.

ITEM FOR VERIFICATION	INSPECTION FREQUENCY		COMMENTS
	CONTINUOUS	PERIODIC	
PREFABRICATED CONSTRUCTION (IBC 1704.2.5)			
PREFABRICATED OR PRECAST CONSTRUCTION		●	WHERE FABRICATION OF ELEMENTS FOR STRUCTURAL LOAD-BEARING OR LATERAL LOAD RESISTING MEMBERS IS BEING CONDUCTED ON THE PREMISES OF A FABRICATOR'S SHOP, SPECIAL INPECTIONS OF THE FABRICATED ITEMS SHALL BE PERFORMED DURING FABRICATION, EXCEPT WHERE THE FABRICATOR HAS BEEN APPROVED TO PERFORM WORK WITHOUT SPECIAL INSPECTIONS IN ACCORDANCE WITH IBC 1704.2.5.1. CERTIFICATE OF COMPLIANCE MUST BE SUBMITTED TO THE BUILDING OFFICIAL FOR ALL COMPLETED WORK.

ITEM FOR VERIFICATION	INSPECTION FREQUENCY		COMMENTS
	CONTINUOUS	PERIODIC	
STEEL WELDING (AISC 360-16)			
INSPECTION TASKS PRIOR TO WELDING			
WELDER QUALIFICATION RECORDS AND CONTINUITY RECORDS	●		
WELDING PROCEDURE SPECIFICATIONS AVAILABLE	●		
MANUFACTUERER CERTIFICATIONS FOR WELDING CONSUMABLES AVAILABLE	●		
MATERIAL IDENTIFICATION (TYPE/GRADE)		●	
WELDER IDENTIFICATION SYSTEM		●	
FIT-UP GROOVE WELDS		●	INCLUDING JOINT GEOMETRY, PREPARATIONS, DIMENSIONS, CLEANLINESS, TACKING, AND BACKING TYPE FIT (WHERE APPLICABLE)
CONFIGURATION AND FINISH OF ACCESS HOLES		●	
FIT-UP OF FILLET WELDS		●	INCLUDING DIMENSIONS, CLEANLINESS, AND TACKING
CHECKING WELDING EQUIPMENT		●	
INSPECTION TASKS DURING WELDING			
CONTROL AND HANDLING OF WELDING CONSUMABLES		●	INCLUDING PACKAGING AND EXPOSURE CONTROL
USE OF QUALIFIED WELDERS		●	
CRACKED TACK WELDS		●	VERIFY NO WELDING OVER CRACKED TACK WELDS
ENVIRONMENTAL CONDITIONS		●	VERIFY WIND SPEED WITHIN LIMITS, PRECIPITATION, AND TEMPERATURE
WELDING PROCEDURE SPECIFICATIONS FOLLOWED		●	VERIFY SETTINGS ON WELDING EQUIPMENT, TRAVEL SPEED, SELECTED WELDING MATERIALS, SHIELDING GAS TYPE/FLOW RATE, PREHEAT APPLIED, INTERPASS TEMPERATURE (MIN/MAX), PROPER POSITION (F, V, H, OH)
WELDING TECHNIQUES		●	VERIFY INTERPASS AND FINAL CLEANING, EACH PASS WITHIN PROFILE LIMITATIONS, EACH PASS MEETS QUALITY REQUIREMENTS
PLACEMENT AND INSTALLATION OF STEEL HEADED STUD ANCHORS		●	
SINGLE-PASS FILLET WELDS		●	
MULTIPASS FILLET WELDS	●		
COMPLETE AND PARTIAL PENETRATION GROOVE WELDS	●		
INSPECTION TASKS AFTER WELDING			
WELDS CLEANED	●		
SIZE, LENGTH AND LOCATION OF WELDS	●		
WELDS MEET VISUAL ACCEPTANCE CRITERIA; CRACK PROHIBITION, WELD/BASE-METAL FUSION, CRATER CROSS SECTION, WELD PROFILES, WELD SIZE, UNDERCUT, AND POROSITY	●		
ARC STRIKES, K-AREA, BACKING AND WELD TABS REMOVED (WHERE REQUIRED), AND ALL REPAIR ACTIVITIES	●		
DOCUMENT ACCEPTANCE OR REJECTION OF WELDED JOINT OR MEMBER		●	
NO PROHIBITED WELDS HAVE BEEN ADDED WITHOUT THE APPROVAL OF EOR		●	

ITEM FOR VERIFICATION	INSPECTION FREQUENCY		COMMENTS
	CONTINUOUS	PERIODIC	
STEEL BOLTING (AISC 360-16)			
INSPECTION TASKS PRIOR TO BOLTING			
MANUFACTURER'S CERTIFICATIONS AVAILABLE FOR FASTENER MATERIALS	●		
FASTENERS		●	MARKED IN ACCORDANCE WITH ASTM REQUIREMENTS
CORRECT FASTENERS SELECTED FOR THE JOINT DETAIL		●	INCLUDING GRADE, TYPE, BOLT LENGTH IF THREADS ARE TO BE EXCLUDED FROM SHEAR PLANE.
CORRECT BOLTING PROCEDURE SELECTED FOR JOINT DETAIL		●	
CONNECTING ELEMENTS		●	MEET APPLICABLE REQUIREMENTS INCLUDING THE APPROPRIATE FAYING SURFACE CONDITION AND HOLE PREPARATION, IF SPECIFIED.
PRE-INSTALLATION VERIFICATION TESTING BY INSTALLATION PERSONNEL OBSERVED AND DOCUMENTED FOR FASTENER ASSEMBLIES AND METHODS USED		●	NOT REQUIRED IF ONLY SNUG-TIGHT JOINTS ARE SPECIFIED
PROTECTED STORAGE		●	STORAGE PROVIDED FOR BOLTS, NUTS, WASHERS AND OTHER FASTENER COMPONENTS
INSPECTION TASKS DURING BOLTING			
FASTENER PLACEMENT		●	FASTENER ASSEMBLIES PLACED IN ALL HOLES, WASHERS, AND NUTS ARE POSTIONED AS REQUIRED
JOINT		●	BROUGHT TO THE SNUG-TIGHT CONDITION PRIOR TO THE PRETENSIONING OPERATION
FASTENER COMPONENT		●	FASTENER COMPONENT NOT TURNED BY THE WRENCH PREVENTED FROM ROTATING
PRETENSIONED FASTENERS		●	VERIFY THAT PRETENSIONED FASTENERS ARE PRETENSIONED IN ACCORDANCE WITH THE RCSC SPECIFICATION, PROGRESSING SYSTEMATICALLY FROM THE MOST RIGID POINT TOWARD THE FREE EDGES
INSPECTION TASKS AFTER BOLTING			
DOCUMENT ACCEPTANCE OR REJECTION OF BOLTED CONNECTIONS	●		

METAL ROOF/FLOOR DECK (1705.2.2, 1705.11.3)			
DECK PLACEMENT		●	VERIFY PLACEMENT IS IN COMPLIANCE WITH APPROVED SUBMITTALS AND CONTRACT DOCUMENTS
DECK MATERIALS		●	VERIFY MATERIAL AND GAUGE ARE IN COMPLIANCE WITH CONTRACT DOCUMENTS AND APPROVED SUBMITTALS
FASTENING		●	FASTENER TYPE, SIZE, AND SPACING COMPLIES WITH CONTRACT DOCUMENTS, APPROVED SUBMITTALS, AND MANUFACTURERS REQUIREMENTS.

COLD-FORMED (METAL STUD) CONSTRUCTION (1705.11, 1705.12.3)			
PRE-FABRICATED COLD-FORM TRUSSES		●	INSPECTION SHALL MEET THE REQUIREMENTS FOR PREFABRICATED MEMBERS PER IBC 1704.2.5 & 1705.2.4
ANCHORAGE AND FASTENING OF SHEARWALLS, DIAPHRAGMS, DRAGS, BLOCKING, AND ALL OTHER APPLICABLE ELEMENTS OF THE LATERAL FORCE RESISTING SYSTEM.		●	VERIFY SHEATHING TYPE, SHEATHING THICKNESS & GRADE, NOMINAL SIZE OF FRAMING MEMBERS, AND THE TYPE & SIZE OF FASTENERS USED, MATCHES THE REQUIREMENTS OF THE CONSTRUCTION DOCUMENTS. SPECIAL INSPECTIONS ARE NOT REQUIRED WHERE: (1) SHEATHING IS GYPSUM OR FIBERBOARD, (2) SHEATHING IS APPLIED ON ONLY ONE SIDE OF THE SHEAR WALL AND THE FASTENER SPACING IS GREATER THAN 4" O.C.
HOLDOWNS, STRAPS, AND TIE PLACEMENT AND FASTENING		●	VERIFY PLACEMENT AND ATTACHMENT TO STRUCTURE MATCHES LAYOUT ON PLANS AND MEETS MANUFACTURERS SPECIFICATIONS
EXTERIOR SHEATHING/DECKING (ROOF & WALLS)		●	FASTENING OF DECK TO FRAMING MEMBERS. FRAMING CONNECTIONS TO ROOF & FLOOR DIAPHRAGMS.

ABBREVIATIONS

A.B.	ANCHOR BOLTS	INT	INTERIOR
ABV	ABOVE		
ACI	AMERICAN CONCRETE INSTITUTE	JST	JOIST
ADJ	ADJACENT	JT	JOINT
AFF	ABOVE FINISHED FLOOR		
AISC	AMERICAN INSTITUTE OF STEEL CONSTRUCTION	K	KIPS
ALT	ALTERNATE	KLF	KIPS PER LINEAR FOOT
APPROX	APPROXIMATE	KSF	KIPS PER SQUARE FOOT
ARCH	ARCHITECT	LBS (OR #)	POUNDS
ARCH'L	ARCHITECTURAL (DRAWINGS)	LF	LINEAR FOOT
ASTM	AMERICAN SOCIETY OF TESTING AND MATERIALS	LL	LIVE LOAD
		LLH	LONG LEG HORIZONTAL
AWS	AMERICAL WELDING SOCIETY	LLV	LONG LEG VERTICAL
		LSV	LONG SIDE VERTICAL
BFF	BELOW FINISHED FLOOR	LSH	LONG SIDE HORIZONTAL
BLW	BELOW		
BOT	BOTTOM	MFR	MANUFACTURER
BRB	BUCKLING RESTRAINED BRACE	MAX	MAXIMUM
BRG	BEARING	MECH	MECHANICAL (DRAWINGS)
BTWN	BETWEEN	MIN	MINIMUM
		MISC	MISCELLANEOUS
CJ	CONTROL JOINT	MSJC	MASONRY STANDARDS JOINT COMMITEE
CL	CENTER LINE		
CLR	CLEAR	MSW	METAL STUD WALL
CMU	CONCRETE MASONRY UNITS	MTL	METAL
COL	COLUMN		
COMP	COMPOSITE	NFPA	NATIONAL FIRE PROTECTION ASSOCIATION
CONC	CONCRETE		
CONN	CONNECTION	NIC	NOT IN CONTRACT
CONST	CONSTRUCTION	NTS	NOT TO SCALE
CONT	CONTINUOUS		
CONTR	CONTRACTOR	O.A.	ON CENTER
CP	CONCRETE PIER	OD	OUTSIDE DIAMETER
CRSI	CONCRETE REINFORCING STEEL INSTITUTE	OPP	OPPOSITE
CW	CONCRETE WALL	PCF	POUNDS PER CUBIC FOOT
		PDF	POWDER DRIVEN FASTENER
DB	DECK BEARING	PL	PLATE
DBA	DEFORMED BAR ANCHOR	PLF	POUNDS PER LINEAL FOOT
DB	DECK BEARING	PLUMB	PLUMBING (DRAWINGS)
DBL	DOUBLE	PSF	POUNDS PER SQUARE FOOT
Ø	OR DIA. DIAMETER	PSI	POUNDS PER SQUARE INCH
DIM(S)	DIMINSION(S)		
DL	DEAD LOAD	REINF	REINFORCING
DET	DETAIL	REQ'D	REQUIRED
DWG(S)	DRAWING(S)	RTU	ROOF TOP UNIT
		SFRS	SEISMIC FORCE RESISTING SYSTEM
EA	EACH	SBP	STEEL BASE PLATE
EF	EACH FACE	SC	STEEL COLUMN
EJ	EXPANSION JOINT	SCP	STEEL CAP PLATE
ELECT	ELECTRICAL (DRAWINGS)	SCHED	SCHEDULE
ELEV	ELEVATION	SF	SQUARE FOOT
E.L.F.	EQUIVALENT LATERAL FORCE	SIM	SIMILAR
EMBED	EMBEDMENT	SJI	STEEL JOIST INSTITUTE
EOR	ENGINEER OF RECORD	SL	SNOW LOAD
EOS	EDGE OF SLAB	SPECS	SPECIFICATIONS
EQ	EQUAL, EQUALLY	STRUCT	STRUCTURAL (DRAWINGS)
EXP	EXPANSION	STS	SELF TAPPING SCREWS
EXT	EXTERIOR	SW	WOOD SHEAR WALL
EQUIP	EQUIPMENT		
EXIST	EXISTING	T&B	TOP AND BOTTOM
		TO	TOP OF ...
FDN	FOUNDATION	TOF	TOP OF FOOTING
FLR	FLOOR	TOS	TOP OF SLAB
FRMG	FRAMING	TOW	TOP OF WALL
FT	FEET	TYP	TYPICAL
FTG	FOOTING		
FV	FIELD VERIFY	U.N.O.	UNLESS NOTED OTHERWISE
GALV	GALVANIZED	VERT	VERTICAL
GC	GENERAL CONTRACTOR		
GSN	GENERAL STRUCTURAL NOTES	W/	WITH
		W/O	WITHOUT
HORIZ	HORIZONTAL	WP	WORK POINT
HSA	HEADED STUD ANCHOR	WSW	WOOD STUD WALL
HT	HEIGHT	WWF	WELDED WIRE FABRIC
		WWM	WELDED WIRE MESH
IBC	INTERNATIONAL BUILDING CODE		
ID	INSIDE DIAMETER		
IN	INCH(ES)		

aeurbia
architects and engineers
909 West South Jordan Parkway
South Jordan, Utah 84095
phone: 801.746.0456 - fax: 801.575.6456
webpage: aeurbia.com

LICENSED PROFESSIONAL ENGINEER
No. 11196555
TYLER ALDER
STATE OF UTAH

12/02/2022

VELOCIRAX TI
LEHI BUSINESS PARK
850 EAST MILL POND DRIVE LEHI, UTAH

Revision Schedule

MARK	DESCRIPTION	Revision Date

AE2021.415

GENERAL STRUCTURAL NOTES

DATE: 12/02/2022

SHEET #:

S002

PERMIT SET

STEEL COLUMN SCHEDULE

COLUMN MARK	COLUMN SIZE	STEEL BASE PLATE	STEEL CAP PLATE	ANCHOR BOLTS
SC-4A	HSS 4x4x1/4	3/4" (SBP-2) OR (SBP-3)	1/2" (SCP-1) OR (SCP-2)	3/S501

STEEL COLUMN NOTES:

1. TYPICAL ANCHOR RODS SHALL MEET THE FOLLOWING REQUIREMENTS, UNO:
   A. ANCHOR BOLTS SHALL PROJECT 3" MINIMUM ABOVE TOP OF THE BASE PLATE.
   B. ANCHOR EMBEDMENT INTO FOOTING SHALL BE 12x ANCHOR BOLT DIAMETER.
   C. EMBEDDED ENDS SHALL HAVE 3" MINIMUM HOOKS.
2. TYPICAL ANCHOR BOLTS SHALL BE INSTALLED WITH HARDENED WASHERS BENEATH NUT. ANY HOLES LARGER THAN THE BOLT DIAMETER PLUS 5/16" SHALL HAVE 5/16" PLATE WASHERS INSTALLED BENEATH HARDENED WASHERS.
   A. TYPICAL BASE PLATE ANCHOR HOLES SHALL BE PER AISC SPECIFICATION (5/16" MAX OVERSIZE).
3. IF DESIRED SPLICE LOCATIONS DIFFER FROM THOSE LEVELS SHOWN ON PLAN, NOTIFY STRUCTURAL ENGINEER PRIOR TO FABRICATION, WRITTEN APPROVAL REQUIRED.
4. NON-SHRINK GROUT UNDER BASE PLATES SHALL BE 1 1/2" THICK U.N.O.
5. FLOOR ELEVATIONS SHOWN ARE FOR INFORMATION ONLY. CONTRACTOR TO CONFIRM WITH ARCHITECTURAL.
6. ALL CAP PLATES/BASE PLATES SHALL WELD TO COLUMN WITH 5/16" FILLET WELD, U.N.O.
7. REFER TO DETAILS FOR ANCHOR BOLT LAYOUT. MODIFICATIONS TO ANCHOR BOLT LAYOUT MAY BE USED WITH WRITTEN APPROVAL.
8. ANCHOR BOLTS SHALL NOT BE WELDED (INCLUDING TACK WELDS).
9. SEE GENERAL STRUCTURAL NOTES FOR MATERIALS AND OTHER REQUIREMENTS.

PLATE LEGEND
'CO' = 1/2" MINIMUM
'ED' = 1 1/2" MINIMUM
'BC' = BEAM OR GIRDER GAGE
'W' = WHICHEVER IS GREATER:
BEAM OR GIRDER GAGE +1"
OR
BEAM OR GIRDER GAGE +3"
OR
COLUMN WIDTH +1"

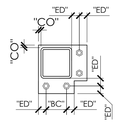

BASE PL SBP-3

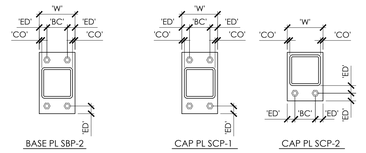

BASE PL SBP-2 | CAP PL SCP-1 | CAP PL SCP-2

BASE PLATE LAYOUTS | CAP PLATE LAYOUTS

6 S004 STEEL COLUMN SCHEDULE
SCALE: N.T.S.

SHEARWALL SCHEDULE

LABEL	WALL FRAMING & ANCHORAGE				WALL SHEATHING			
	METAL STUD SIZE & SPACING	BOTTOM TRACK	TOP TRACK	BOTTOM TRACK FASTENER	SHEATHING (SEE NOTE 4.5)	FASTENER SIZE	EDGE FASTENER	FIELD FASTENER
MSW-3A	362S162-43 AT 16" O.C.	362T125-33	362T125-54 SEE NOTE 11	SEE NOTE 10	PER ARCH	#8	6" O.C.	6" O.C.
MSW-3B	362S162-54 AT 16" O.C.	362T125-33	362T125-54 SEE NOTE 11	SEE NOTE 10	PER ARCH	#8	6" O.C.	6" O.C.
MSW-6A	600S162-43 AT 16" O.C.	600T125-43	600T125-54 SEE NOTE 11	SEE NOTE 10	7/16" PLY	#8	6" O.C.	6" O.C.
MSW-8B	800S162-43 AT 16" O.C.	600T125-43	600T125-54 SEE NOTE 11	SEE NOTE 10	7/16" PLY	#8	6" O.C.	6" O.C.

1. REFER TO ARCHITECTURAL DRAWINGS FOR WALL SIZES AND LOCATIONS.
2. STUDS SHALL BE A MINIMUM OF 1 5/8" WIDE WITH A 3/8" MIN RETURN LIP.
3. TRACKS SHALL BE 1 1/4" WIDE MINIMUM.
4. SHEATHING SHALL BE FIRE RATED AND SHALL CONFORM TO THE GIVEN CONSTRUCTION TYPE SPECIFIED BY ARCHITECT.
5. 7/16" PLYWOOD, ORIENTED STAND BOARD AND COMPOSITE BOARD (BUT NOT STRUCTURAL PARTICLE BOARD) ARE ACCEPTED AS EQUAL.
6. SHEAR WALL PANELS INDICATED ON SCHEDULE ARE TO BE SHEATHED FOR FULL HEIGHT OF WALL.
7. FASTENERS/SCREWS SHALL PENETRATE FRAMING MEMBER (3) THREADS MINIMUM.
8. WALL STUDS SHALL HAVE BLOCKING/BRIDGING INSTALLED AT 4'-0" O.C. MAX. FULL HEIGHT OF WALL.
9. SEE GENERAL STRUCTURAL NOTES FOR ADDITIONAL REQUIREMENTS FOR COLD FORMED STEEL.
10. CONTRACTOR MAY ATTACH TYPICAL BOTTOM TRACK TO EXISTING SLAB ON GRADE WITH ONE OF THE FOLLOWING OPTIONS:
    a. (2) HILTI X-U PAF AT 16" O.C. W/ 1" MIN EMBEDMENT.
    b. 1/2" DIA x 4 1/2" TITEN HD AT 32" O.C.
    c. SEE DETAILS FOR TYPICAL BOTTOM TRACK ATTACHMENT DETAIL.
11. TOP TRACK TO FASTEN TO FRAMING ABOVE WITH #10 SCREWS AT 6" O.C. (STAGGERED) SEE 'TOP TRACK AT STUDS' DETAIL.

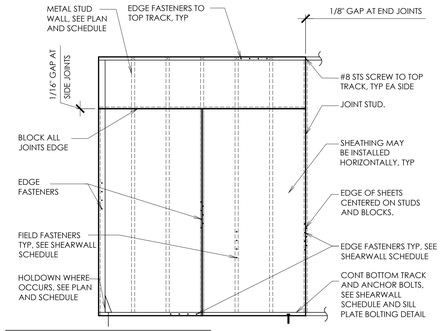

NOTE:
ALL FASTENERS/SCREWS SHALL PENTRATE FRAMING MEMBERS A MINIMUM OF (3) THREADS.

TYPICLAL SHEARWALL ATTACHMENT DETAIL

A-325 BOLT SCHEDULE

MAXIMUM BEAM SIZE IN EACH BEAM DEPTH GROUP	A-325N BOLTS	
	No. PER BEAM	SIZE
W8	2	3/4" DIA.
W10	2	3/4" DIA.
W12	3	3/4" DIA.
W14	3	3/4" DIA.
W16	4	3/4" DIA.
W18	5	7/8" DIA.
W21	6	7/8" DIA.
W24	6	7/8" DIA.
W27	7	7/8" DIA.
W30	9	7/8" DIA.

1. HSS COLUMN SHALL HAVE A MINIMUM 1/4" THICKNESS FOR 3/8" SHEAR TABS AND MINIMUM 3/8" THICKNESS FOR 1/2" SHEAR TABS.
2. FILLET WELDS SHALL BE AS FOLLOWS:
   ONE SIDE: PLATE THICKNESS MINUS 1/16" (1/4" MIN.)
   TWO SIDES: 1/2" PLATE THICKNESS PLUS 1/16" (1/4" MIN.) EACH SIDE
3. BEAM WEB CONNECTION PLATE THICKNESS EQUALS BEAM WEB THICKNESS PLUS 1/8" (3/8" MIN).
4. STIFFENER PL THICKNESS EQUALS BEAM FLANGE THICKNESS OF THE BEAM FRAMING INTO COLUMN (3/8" MIN).
5. BOLT EDGE DISTANCE SHALL BE EQUAL TO 2X THE DIAMETER OF THE BOLT MIN.) AT ALL EDGES.
6. VERTICAL BOLT SPACING SHALL BE 3" O.C. TYP FULL HT OF WEB. SPACING MAY BE REDUCED TO 3X THE DIAMETER OF THE BOLT IF REQ'D TO MAINTAIN A SINGLE ROW OF BOLTS (SINGLE ROW OF BOLTS IS PREFERRED).
7. WHEN MORE THAN ONE COLUMN OF BOLTS IS REQUIRED, THE FIRST COLUMN OF BOLTS SHALL BE COMPLETE WITH THE REMAINDER OF THE BOLTS PLACED IN THE SECONED COLUMN.
8.

STEEL BEAM STIFFENER PLATES		
FLANGE WIDTH	STIFFENER THICKNESS	WELD SIZE
LESS THAN 8 1/4"	1/4"	3/16"
8 1/4" TO 12 1/4"	3/8"	1/4"
12 1/4" TO 16 1/2"	1/2"	5/16"
16 1/2" TO 20 3/4"	5/8"	3/8"

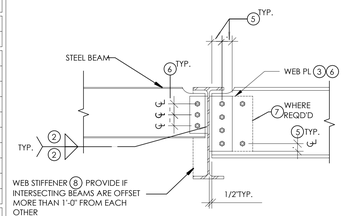

BEAM TO BEAM - WEB PLATE CONNECTION

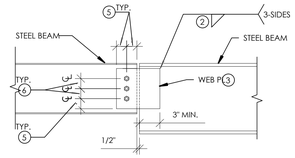

BEAM TO PARALLEL BEAM - WEB PLATE CONNECTION

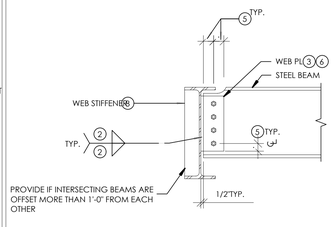

BEAM TO BEAM - WEB PLATE CONNECTION

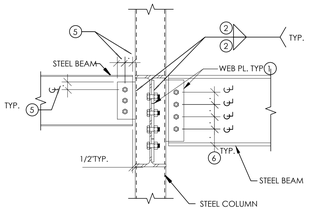

BEAM TO TUBE STEEL COLUMN - WEB CONNECTION

12 S004 BOLT SCHEDULE FOR TYP. STEEL CONNECTIONS
SCALE: N.T.S.

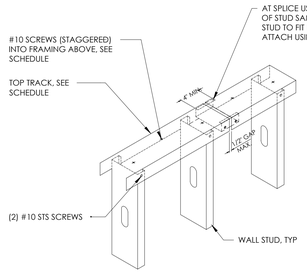

TOP TRACK AT STUDS

6 S003 METAL STUD WALL & SHEATHING SCHEDULE
SCALE: N.T.S.

SHEATHING SCHEDULE

LOCATION	SHEATHING	FASTENER SIZE	EDGE FASTENING		FIELD FASTENING	BOUNDARY FASTENING	EDGE BLOCK
			CONT. EDGE	OTHER EDGE			
FLOOR	23/32" SHEATING	#8 OR 10d NAIL	6" O.C.	6" O.C.	6" O.C.	6" O.C.	NO

NOTES:

1. SEE GENERAL STRUCTURAL NOTES FOR ADDITIONAL REQUIREMENTS.

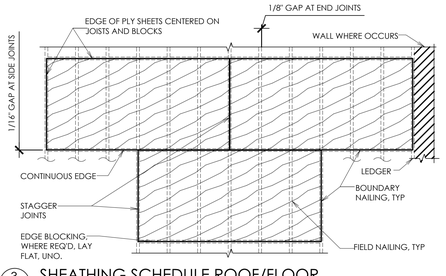

3 S003 SHEATHING SCHEDULE ROOF/FLOOR
SCALE: N.T.S.

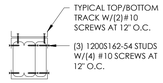

HDR-12

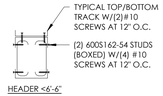

HEADER <6'-6"

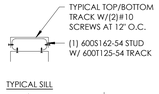

TYPICAL SILL

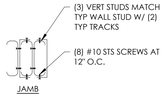

JAMB

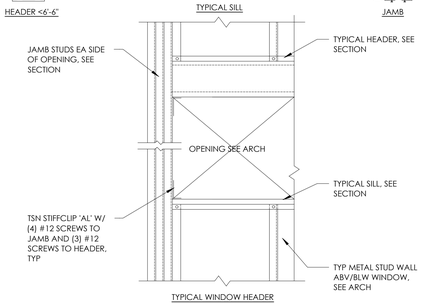

TYPICAL WINDOW HEADER

8 S003 HEADER AND BOX BEAM SCHEDULE
SCALE: N.T.S.

aeurbia architects and engineers
909 West South Jordan Parkway
South Jordan, Utah 84095
phone: 801.746.0456 - fax: 801.575.6456
webpage: aeurbia.com

STRUCTURAL ENGINEER No. 1198555 TYRON ALDER STATE OF UTAH
12/02/2022

VELOCIRAX TI
LEHI BUSINESS PARK
850 EAST MILL POND DRIVE LEHI, UTAH

Revision Schedule		
MARK	DESCRIPTION	Revision Date

AE2021.415

TYPICAL DETAILS

DATE: 12/02/2022

PERMIT SET

SHEET #:

S003

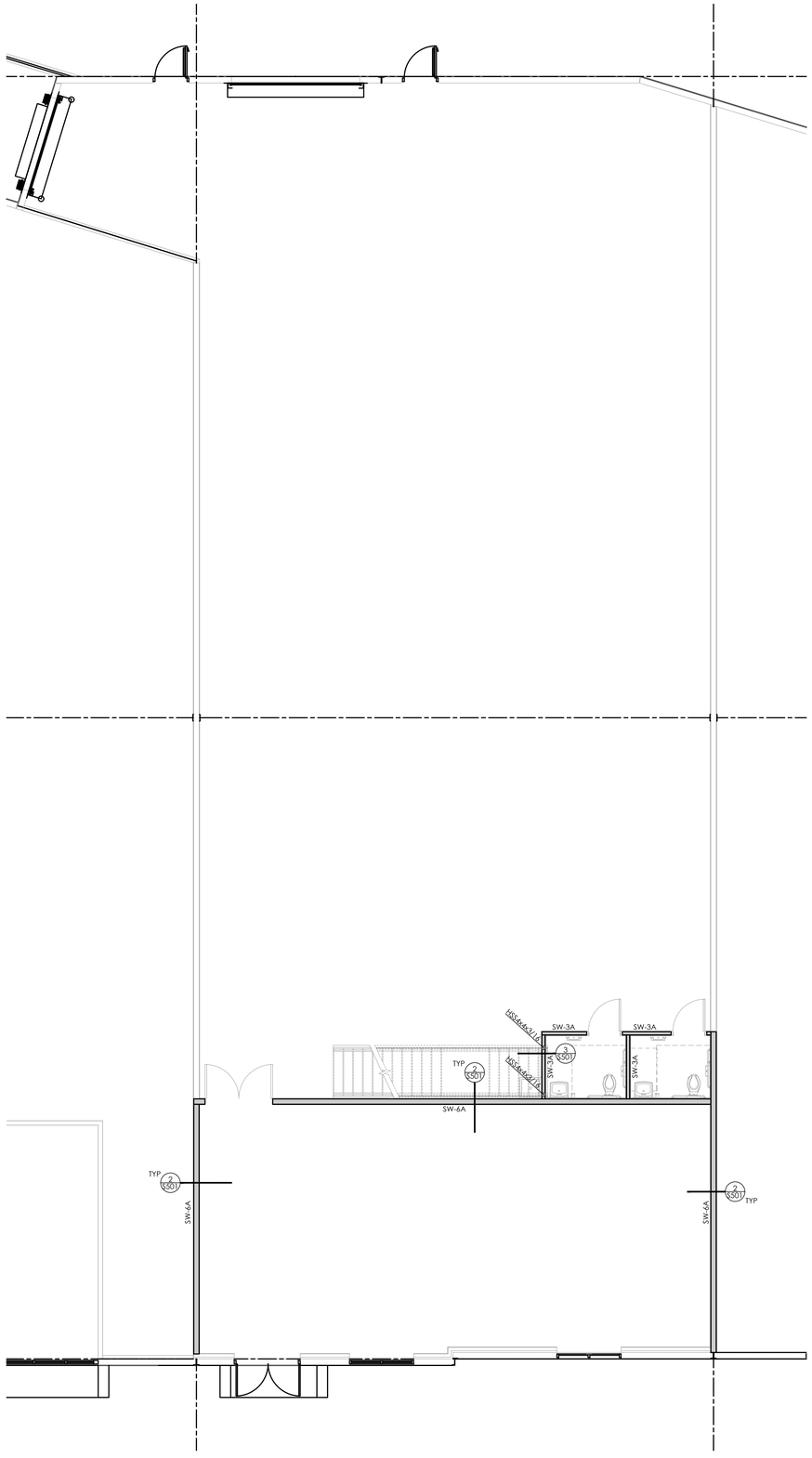

1 S101 FOUNDATION PLAN

SCALE: (30x42) 3/16"=1'-0"

FOOTING & FOUNDATION NOTES

1. VERIFY ALL DIMENSIONS TO ALL STEEL COLUMNS WITH ARCHITECTURAL DRAWINGS.
2. ALL SPOT FOOTINGS SHALL BE CENTERED UNDER FOOTINGS, UNO.
3. CONTRACTOR TO VERIFY ALL DIMENSIONS AND REFERENCES TO EXISTING ELEMENTS.
4. TYPICAL BEARING WALLS AND COLUMNS MAY BEAR AT THE EXISTING SLAB ON GRADE, (UNLESS NOTED OTHERWISE).
5. SEE SHEET S501 FOR TYPICAL FOOTING & FOUNDATION DETAILS.

LEGEND

FSX.X	=	INDICATES SPOT FOOTING, SEE SCHEDULE ON THIS SHEET.
FCX.X	=	INDICATES CONTINUOUS FOOTING, SEE SCHEDULE ON THIS SHEET.
SC-X	=	INDICATES STEEL COLUMN, SEE SCHEDULE ON SHEET S003
	=	INDICATES EXISTING WALL
SW-x	=	INDICATES WOOD BEARING/SHEAR WALL, SEE SCHEDULE ON SHEET S003 FOR SHEATHING AND ADDITIONAL REQUIREMENTS.

ae urbia architects and engineers
909 West South Jordan Parkway
South Jordan, Utah 84095
phone: 801.746.0456 - fax: 801.575.6456
webpage: aeurbia.com

STATE OF UTAH LICENSED PROFESSIONAL ENGINEER No. 10986855 TYSON ALDERSON

12/02/2022

VELOCIRAX TI
LEHI BUSINESS PARK
850 EAST MILL POND DRIVE LEHI, UTAH

Revision Schedule

MARK	DESCRIPTION	Revision Date

AE2021.415

FOUNDATION PLAN

DATE: 12/02/2022

SHEET #:

S101

PERMIT SET

GRAPHIC SCALE 0 4' 8' 12'

NORTH

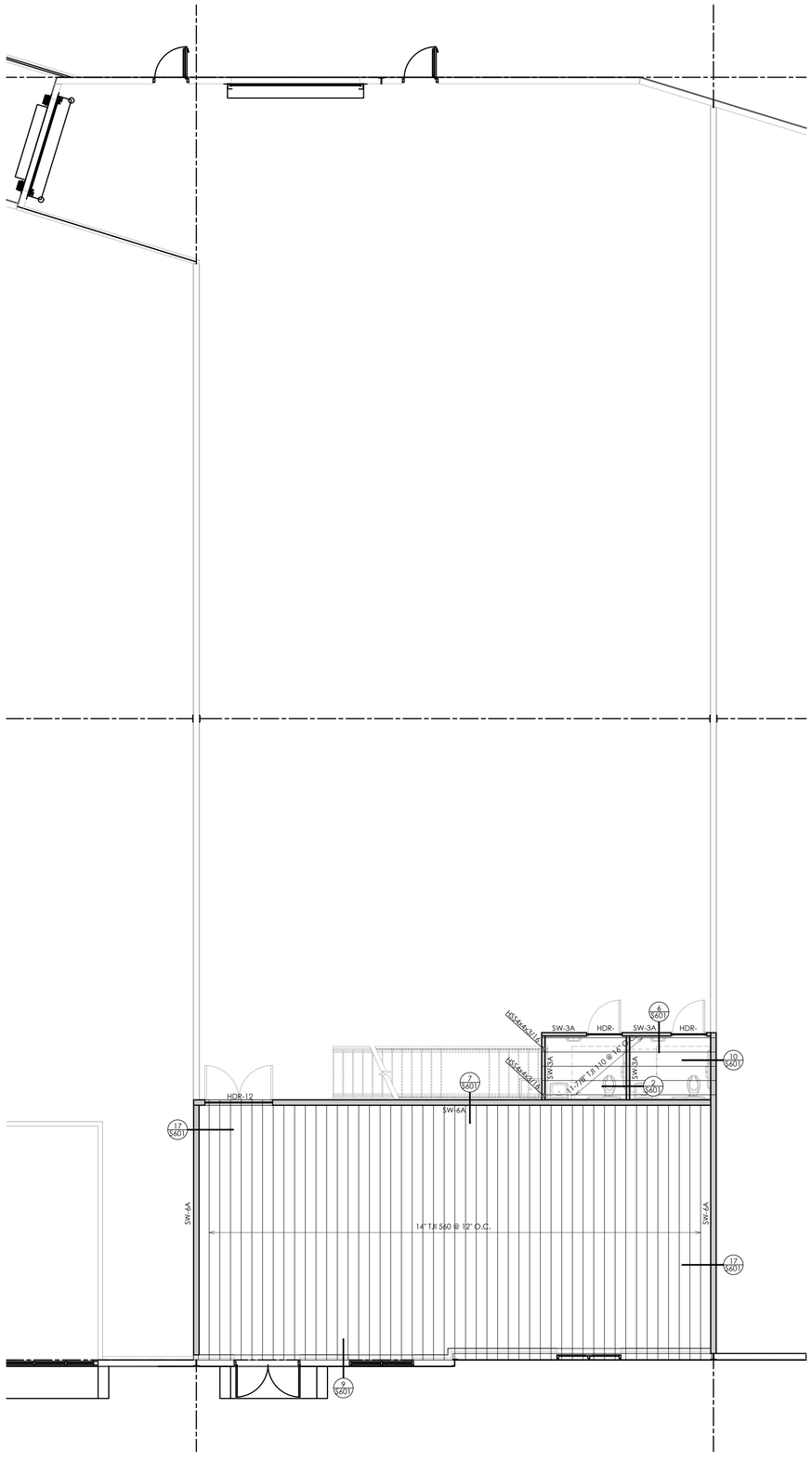

1 S102 MEZZANINE PLAN

SCALE: (30x42) 3/16"=1'-0"

FRAMING NOTES:

1. VERIFY ALL DIMENSIONS WITH ARCHITECTURAL DRAWINGS.
2. SCHEDULED MARK DESIGNATIONS ARE TYPICAL TO THE PROJECT AND MAY NOT NECESSARILY BE FOUND ON THIS PLAN.
3. FOR CLARITY - DETAILS MAY SHOW ONLY ONE SIDE OF FRAMING CONDITION.
4. FOR CLARITY - ALL OPENINGS MAY NOT BE SHOWN ON FRAMING PLAN. FOR EX. NUMBER AND LOCATION OF OPENINGS SEE ARCHITECTURAL, MECHANICAL, PLU AND ELECTRICAL DRAWINGS. FOR FRAMING AT OPENINGS SEE TYPICAL DETAILS
5. ALL WOOD POSTS TO EXTEND TO FOUNDATION. USE SQUASH BLOCKING AT FLO LEVELS.
6. PROVIDE FULL BEARING UNDER ALL GIRDER TRUSSES. POST SIZES SHOWN ARE MIN

LEGEND

	=	INDICATES JOIST
	=	INDICATES WOOD STUD WALL
	=	INDICATES WOOD FLOOR SHEATHING, SEE SCHEDULE ON SHEET S004.
SC-x	=	STEEL COLUMN SEE SCHEDULE ON SHEET S003
	=	INDICATES BEAM
HDR	=	INDICATES HEADER, SEE SCHEDULE ON S003

aeurbia
architects and engineers
909 West South Jordan Parkway
South Jordan, Utah 84095
phone: 801.746.0456 - fax: 801.575.6456
webpage: aeurbia.com

PROFESSIONAL ENGINEER
No. 11088888
TYSON ALLEN
STATE OF UTAH

12/02/2022

VELOCIRAX TI
LEHI BUSINESS PARK
850 EAST MILL POND DRIVE LEHI, UTAH

Revision Schedule

MARK	DESCRIPTION	Revision Date

AE2021.415

MEZZANINE PLAN

DATE: 12/02/2022

SHEET #:

S102

PERMIT SET

0 4' 8' 12'
GRAPHIC SCALE

NORTH

11/28/2022 8:36:28 AM

P:\AE URBIA JOBS\2021\AE2021.415 - MIKE HORAN - Velocirax TI - Lehi Business Park\1 Architectural\VELOCIRAX TI.rvt

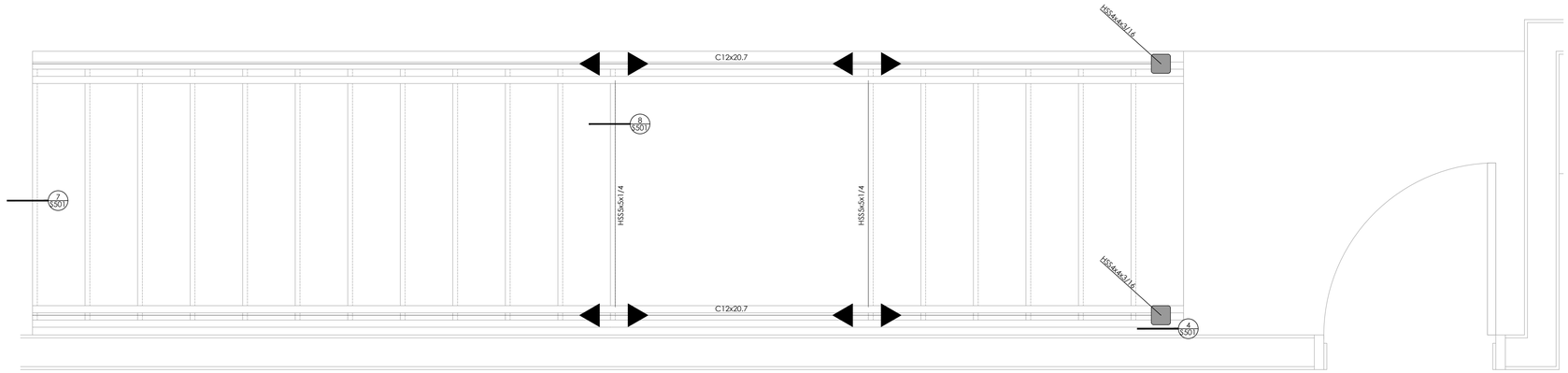

18 S401 NORTH STAIR
SCALE: N.T.S.

aeurbia
architects and engineers
909 West South Jordan Parkway
South Jordan, Utah 84095
phone: 801.746.0456 - fax: 801.575.6456
webpage: aeurbia.com

PROFESSIONAL ENGINEER
No. 11393551
TYRON ALDER
STATE OF UTAH
12/02/2022

VELOCIRAX TI
LEHI BUSINESS PARK
850 EAST MILL POND DRIVE LEHI, UTAH

Revision Schedule

MARK	DESCRIPTION	Revision Date

AE2021.415

ENLARGED STAIR VIEWS

DATE: 12/02/2022

SHEET #:

S401

PERMIT SET

11/28/2022 8:38:26 AM

P:\AE URBIA JOBS\2021\AE2021.415 - MIKE HORAN - Velocirax TI - Lehi Business Park\1 Architectural\VELOCIRAX TI.rvt

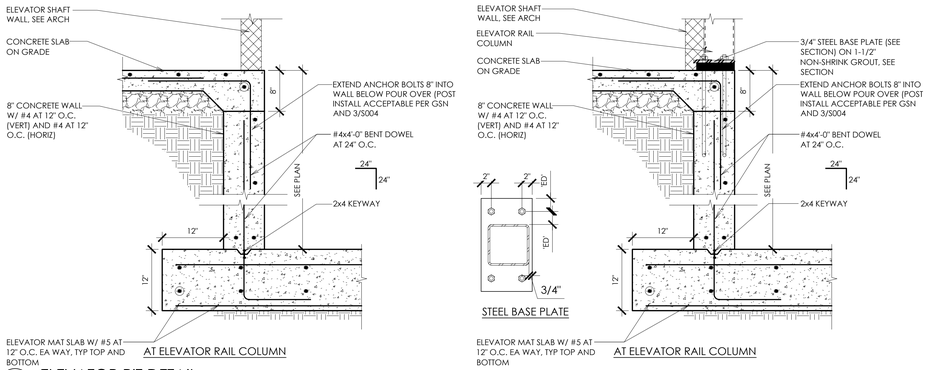

17 / S501 ELEVATOR PIT DETAIL
SCALE: N.T.S.

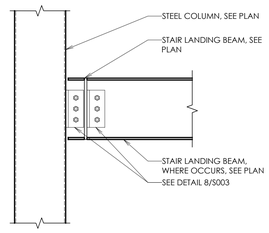

9 / S501 CHANNEL BEARING AT SIDE OF COLUMN
SCALE: N.T.S.

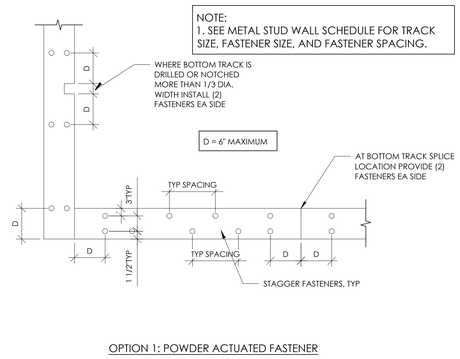

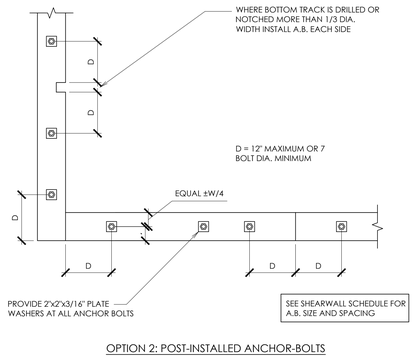

5 / S501 TYPICAL BOTTOM TRACK ATTACHMENT DETAIL
SCALE: N.T.S.

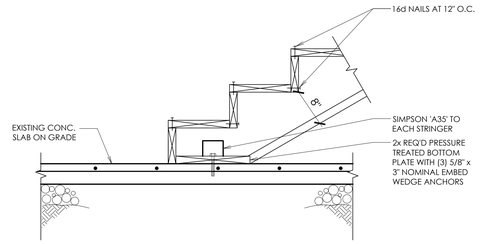

6 / S501 STAIR STRINGER TO SLAB
SCALE: N.T.S.

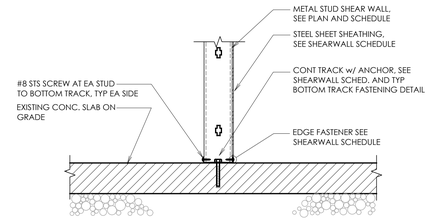

2 / S501 INTERIOR SHEARWALL AT EXISTING SLAB
SCALE: N.T.S.

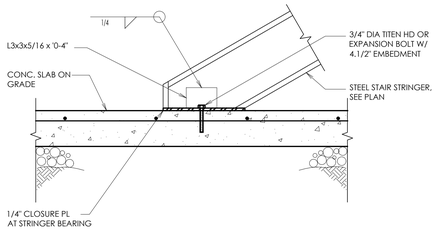

7 / S501 STAIR STRINGER AT CONCRETE SLAB
SCALE: N.T.S.

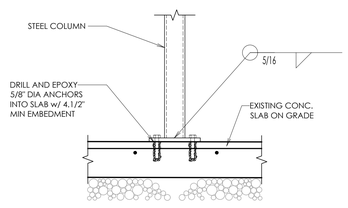

3 / S501 STEEL COLUMN AT EXISTING SLAB
SCALE: N.T.S.

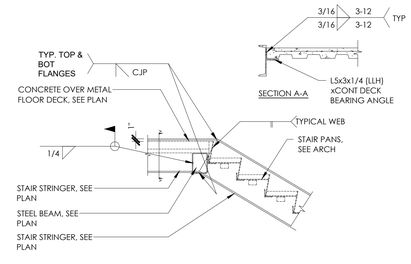

8 / S501 HANGING COLUMN AT STEEL BEAM
SCALE: N.T.S.

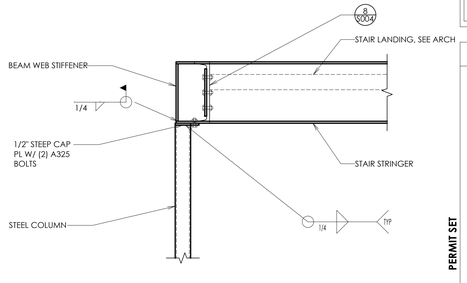

4 / S501 STAIR LANDING DETAIL
SCALE: N.T.S.

ae urbia architects and engineers
909 West South Jordan Parkway
South Jordan, Utah 84095
phone: 801.746.0456 - fax: 801.575.6456
webpage: aeurbia.com

PROFESSIONAL ENGINEER No. 11383555 TYLER ALDER STATE OF UTAH

12/02/2022

VELOCIRAX TI
LEHI BUSINESS PARK
850 EAST MILL POND DRIVE LEHI, UTAH

Revision Schedule

MARK	DESCRIPTION	Revision Date

PERMIT SET

AE2021.415

TYPICAL DETAILS

DATE: 12/02/2022

SHEET #:

S501

11/28/2022 8:38:26 AM
P:\AE URBIA JOBS\2021\AE2021.415 - MIKE HORAN - Velocirax TI - Lehi Business Park\1 Architectural\VELOCIRAX TI.rvt

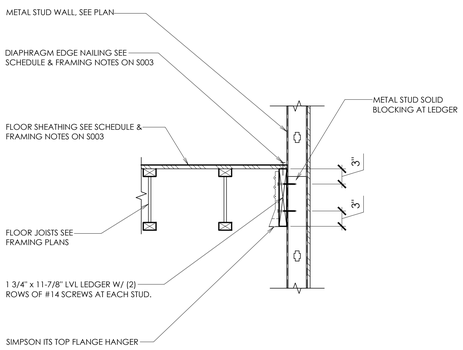

17 S601 FLOOR BEARING DETAIL AT DIMISING WALL
SCALE: N.T.S.

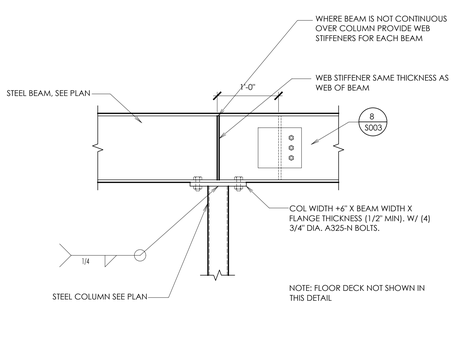

13 S601 TYP. BEAM TO COLUMN CONNECTION
SCALE: N.T.S.

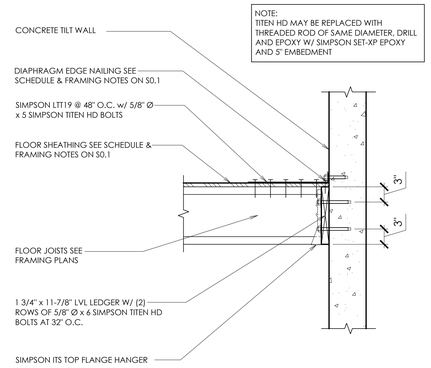

9 S601 FLOOR BEARING DETAIL
SCALE: N.T.S.

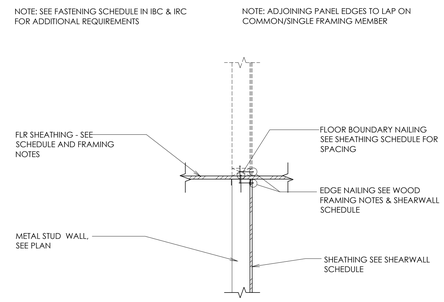

5 S601 FLOOR FRAMING DETAIL
SCALE: N.T.S.

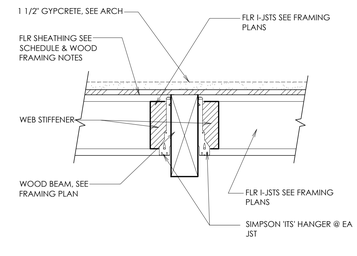

1 S601 FLOOR FRAMING DETAIL
SCALE: N.T.S.

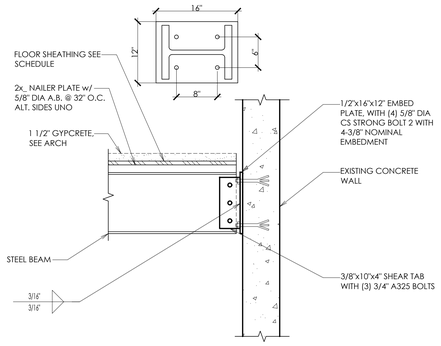

14 S601 STEEL BEAM BEARING AT CONCRETE WALL
SCALE: N.T.S.

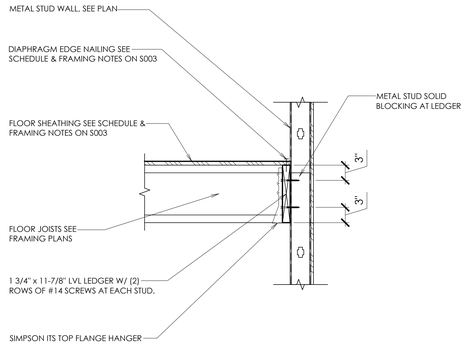

10 S601 FLOOR BEARING DETAIL
SCALE: N.T.S.

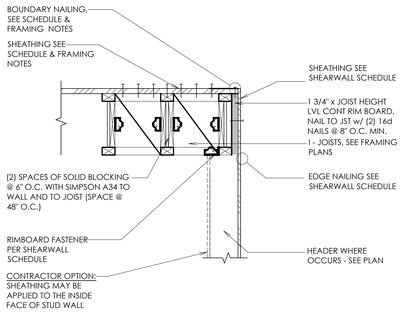

6 S601 FRAMING DETAIL
SCALE: N.T.S.

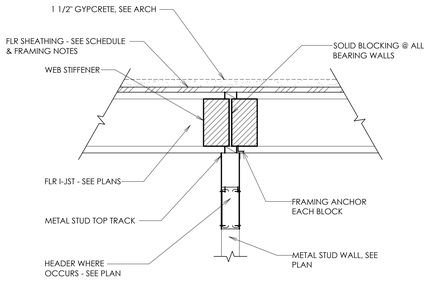

2 S601 FLOOR FRAMING DETAIL
SCALE: N.T.S.

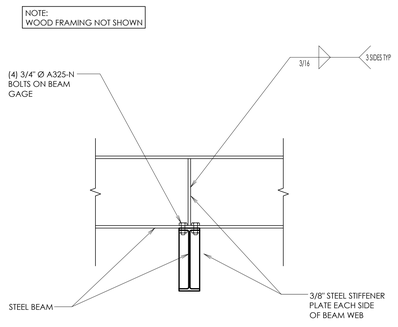

15 S601 STEEL BEAM AT STEEL BEAM
SCALE: N.T.S.

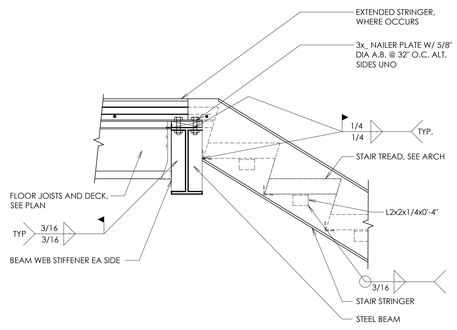

11 S601 STAIR STRINGER AT STEEL BEAM
SCALE: N.T.S.

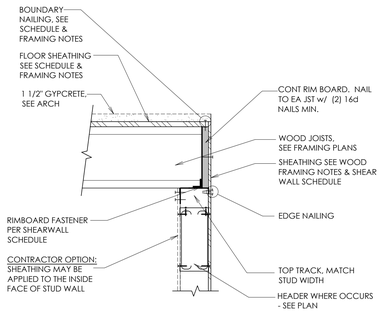

7 S601 FLOOR FRAMING DETAIL
SCALE: N.T.S.

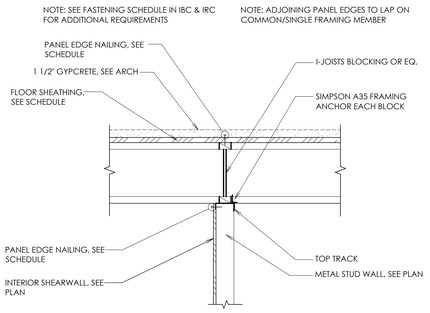

3 S601 (I-JOIST + BLOCKING) SINGLE STORY INTERIOR SHEAR PANEL
SCALE: N.T.S.

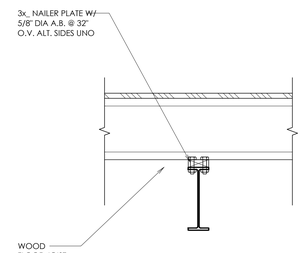

16 S601 STEEL BEAM AT STEEL BEAM
SCALE: N.T.S.

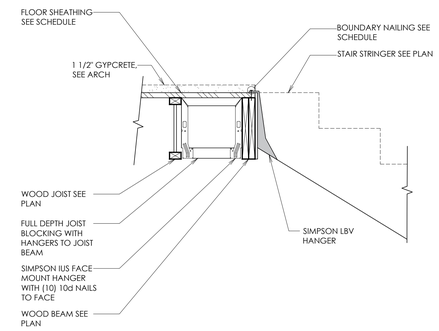

12 S601 STAIR STRINGER AT WOOD BEAM
SCALE: N.T.S.

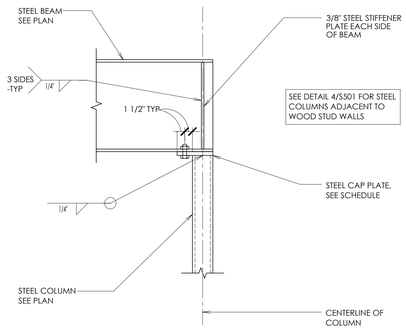

8 S601 TYPICAL STEEL BEAM OVER COLUMN DETAIL
SCALE: N.T.S.

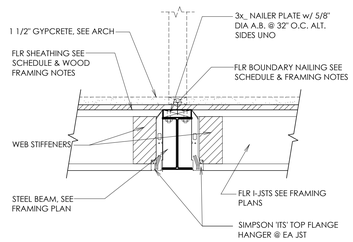

4 S601 JOIST HANGER DETAIL
SCALE: N.T.S.

aeurbia architects and engineers
909 West South Jordan Parkway
South Jordan, Utah 84095
phone: 801.746.0456 - fax: 801.575.6456
webpage: aeurbia.com

PROFESSIONAL ENGINEER
No. 1198666
TYSON ALDERS
STATE OF UTAH
12/02/2022

VELOCIRAX TI
LEHI BUSINESS PARK
850 EAST MILL POND DRIVE LEHI, UTAH

Revision Schedule

MARK	DESCRIPTION	Revision Date

AE2021.415

TYPICAL DETAILS

DATE: 12/02/2022

PERMIT SET

SHEET #:

S601

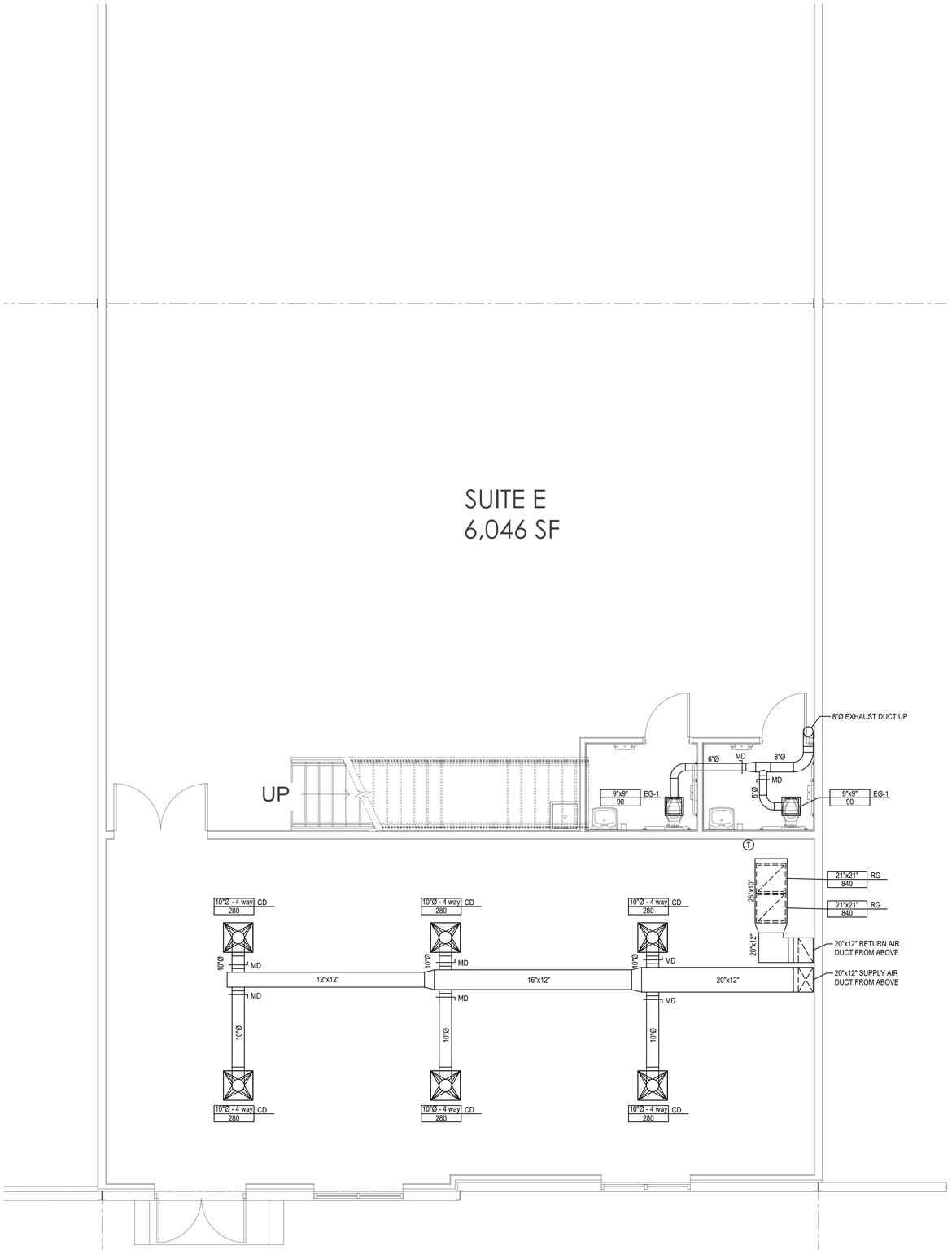

FIRST FLOOR PLAN MECHANICAL

SCALE: 1/4" = 1'-0"

N

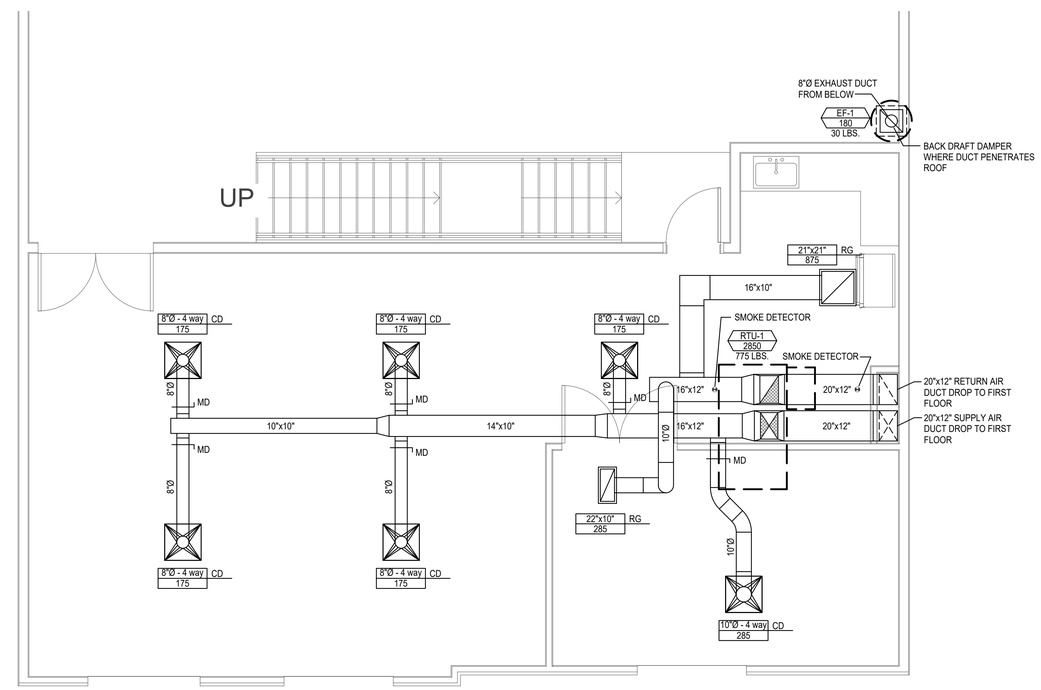

SECOND FLOOR PLAN MECHANICAL

SCALE: 1/4" = 1'-0"

N

DALE R. WILDE CO.
CONSULTING ENGINEERS
428 WINCHESTER SUITE 240
SALT LAKE CITY, UTAH 84107
PHONE 801-433-1125 - EMAIL WILDE@DRWCO.COM

VELOCIRAX T.I.

850 East Mill Pond Drive
Lehi, Utah

REGISTERED PROFESSIONAL ENGINEER
DALE R. WILDE JR.
11-23-2022
STATE OF UTAH

FLOOR PLAN MECHANICAL

rev.	date
1	
2	
3	
4	
5	
6	

M1.1

NOVEMBER 15, 2022

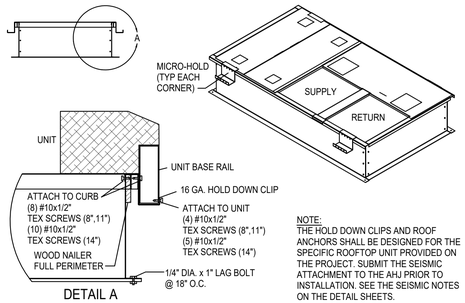

NOTE:
THE HOLD DOWN CLIPS AND ROOF ANCHORS SHALL BE DESIGNED FOR THE SPECIFIC ROOFTOP UNIT PROVIDED ON THE PROJECT. SUBMIT THE SEISMIC ATTACHMENT TO THE AHJ PRIOR TO INSTALLATION. SEE THE SEISMIC NOTES ON THE DETAIL SHEETS.

DETAIL A

DETAIL ROOFTOP UNIT HOLD DOWN	1
SCALE: NONE	M2.1

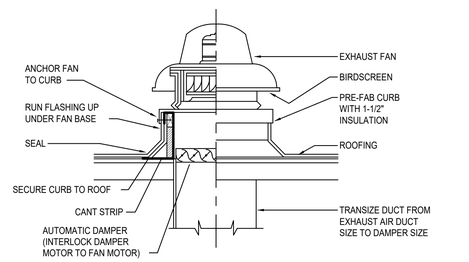

NOTE:
CONTRACTOR TO COORDINATE FLASHING TYPE AND CANT STRIP WITH ROOFING CONTRACTOR

DETAIL ROOF MOUNTED EXHAUST FAN	2
SCALE: NONE	M2.1

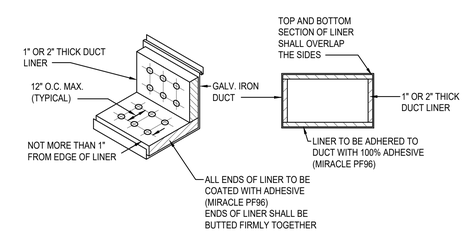

NOTE:
METAL FASTENERS:
OMARK INSUL-PINS,
DURA DYNE FASTENERS
OF GRIP NAILS.

NOTE:
GRIP NAILS SHALL BE INSTALLED BY "GRIP NAIL AIR HAMMER" OR BY AUTOMATIC FASTENER EQUIPMENT

DETAIL DUCT LINER	3
SCALE: NONE	M2.1

MECHANICAL GENERAL NOTES

CODES RULES AND REGULATIONS:

ALL WORK SHALL CONFORM TO ALL APPLICABLE LOCAL AND STATE CODES.

WHENEVER INDICATED MATERIAL WORKMANSHIP, ARRANGEMENT OR CONSTRUCTION IS OF HIGHER QUALITY OR CAPACITY THAN THAT REQUIRED BY THE ABOVE CODES, THE DRAWING AND OR SPECIFICATION SHALL GOVERN.

SHOULD THERE BE ANY DIRECT CONFLICT BETWEEN THE STATE OR LOCAL CODES, LAWS OR REGULATION AND THE DRAWING AND OR SPECIFICATIONS THE CODES, LAWS OR REGULATIONS SHALL GOVERN.

STANDARDS:

INTERNATIONAL BUILDING CODE 2018 EDITION
INTERNATIONAL PLUMBING CODE 2018 EDITION
INTERNATIONAL MECHANICAL CODE 2018 EDITION
INTERNATIONAL FUEL GAS CODE 2018 EDITION
SMACNA DUCT CONSTRUCTION STANDARD, METAL AND FIBERGLASS
SMACNA FIRE DAMPER GUIDE FOR AIR HANDLING SYSTEMS
SMACNA MANUAL FOR BALANCING AND ADJUSTING OF AIR DISTRIBUTION SYSTEMS.
SMACNA GUIDELINES FOR SEISMIC RESTRAINTS OF MECHANICAL EQUIPMENT
NFPA 101 LIFE SAFETY CODES.
NFPA 90A INSTALLATION OF AIR CONDITIONING AND VENTILATION SYSTEMS.
NFPA 90B INSTALLATION OF WARM AIR HEATING SYSTEMS.
NFPA 91 INSTALLATION OF BLOWER AND EXHAUST SYSTEMS
THE STATE OF UTAH " BOILER AND PRESSURE VESSEL REGULATIONS"

EXAMINATION OF SITE:

THE CONTRACTOR SHALL CAREFULLY EXAMINE THE DRAWINGS AND THE SITE AND FAMILIARIZE THEMSELVES WITH ALL EXISTING CONDITIONS BEFORE SUBMITTING ANY PROPOSAL. NO ADDITION COST WILL BE ALLOWED FOR FAILURE TO VISIT THE SITE.

WORKING DRAWINGS AND MEASUREMENTS:

THESE DRAWINGS ARE GENERALLY DIAGRAMMATIC. THEY DO NOT SHOW EVER OFFSET AND BEND THAT MAY BE NEEDED TO INSTALL THE WORK. THE CONTRACTOR SHALL COORDINATE THE DRAWINGS OF ALL OTHER TRADES INCLUDING BUT NOT LIMITED TO THE CIVIL, ARCHITECTURAL, ELECTRICAL, AND STRUCTURAL. THESE DRAWINGS SHALL NOT BE SCALED FOR ROUGH IN OR AS SHOP DRAWINGS.

EQUIPMENT SUBMITTALS:

PROVIDE ALL AT ONE TIME IN A THREE RING BINDER SIX COPIES OF EQUIPMENT PROPOSED TO BE USED ON THIS PROJECT.

REGARDLESS OF ANY INFORMATION OUTLINED IN THE SUBMITTALS OR SHOP DRAWINGS, THE REQUIREMENTS OF THE DRAWINGS MUST FOLLOWED AND AR NOT WAIVED OR SUPERSEDED IN ANY WAY BY THE SUBMITTALS OR SHOP DRAWING REVIEW.

CAULKING AND SEALING:

ALL SPACES BETWEEN DUCTS AND SLEEVES THROUGH FIRE WALLS, FIRE PARTITIONS, FLOORS, AND CEILINGS SHALL CAULKED WITH ONE INCH FILL OF 3M "FIRE BARRIER". CAULKING MUST BE ON BOTH SIDES OF FIRE RATED WALLS.

SUPERVISION AND WORKMANSHIP:

PROVIDE THE SERVICES OF AN EXPERIENCED FORMAN WHO SHALL BE IN CHARGE OF ALL INSTALLATION.

ALL WORKMANSHIP SHALL BE OF FIRST QUALITY. NONE BUT COMPETENT MECHANICS SHALL BE EMPLOYED IN THE WORK. SHOODDY WORKMANSHIP WILL BE CAUSE FOR REJECTION AND REPLACEMENT OF WORK WITHOUT ADDITIONAL COST.

COOPERATION WITH OTHER TRADES:

REFER TO ALL THE DRAWINGS COVERING WORK OF ALL TRADES, WHICH IS CARRIED ON IN CONJUNCTION WITH THE WORK SUCH THAT ALL WORK CAN PROCEED WITHOUT INTERFERENCE RESULTING FROM LACK OF COORDINATION.

MANUFACTURERS INSTRUCTIONS:

THE CONTRACTOR SHALL FOLLOW THE MANUFACTURERS INSTALLATION INSTRUCTION EXPLICITLY IN THE INSTALLATION OF ALL ITEMS OF EQUIPMENT.

COMPLETION REQUIREMENTS:

ALL SYSTEMS SHALL BE TESTED BY THE CONTRACTOR TO DEMONSTRATE THE ALL EQUIPMENT FURNISHED AND INSTALLED OR CONNECTED FUNCTION IN THE MANNER REQUIRED.

ADJUSTMENTS, OPERATION, ETC, ADJUST ALL REGULATORS. OPEN AND CLOSE ALL VALVES SEVERAL TIMES TO INSURE SEAL.

CLEANING:

REMOVE DEBRIS AND TRASH FROM DUCTWORK AND VACUUM IF REQUIRED. PAINT INSIDE OF ALL DUCTS VISIBLE THROUGH GRILLES AND REGISTERS WITH FLAT BLACK ENAMEL. REMOVE SHIPPING LABELS AND OTHER TAGS AND WIPE ALL EQUIPMENT CLEAN.

TESTING AND BALANCING:

AT THE COMPLETION OF THE JOB THE CONTRACTOR SHALL RETAIN THE SERVICES OF AN INDEPENDENT TESTING AND BALANCING CONTRACTOR. PROVIDE ALL TOOLS , EQUIPMENT AND INSTRUMENTS REQUIRED FOR THE TEST AND BALANCING PROCEDURES. TEST AND BALANCE BOTH THE AIR SYSTEMS AND THE HYDRAULIC SYSTEMS.

SUBMIT 4 COPIES OF COMPLETE TEST AND BALANCING REPORTS COMPLETE WITH HALF SCALE DRAWINGS INDICATING THE AIR OPENING NUMBERS AND FLOW STATION NUMBERS THAT CORRESPOND TO THE NUMBERING SYSTEMS IN THE REPORTS

IDENTIFY AND LIST SIZE TYPE AND MANUFACTURER OF ALL EQUIPMENT. MAKE ALL ADJUSTMENTS TO DAMPERS, DRIVES AND BALANCE VALVES TO OBTAIN THE DESIGN FLOW QUANTITIES . FLOW QUANTITIES SHALL BE WITHIN PLUS OR MINUS 5 % OF DESIGN.

GUARANTEE:

BY THE ACCEPTANCE OF AN CONTRACT AWARD FOR THE WORK HERE IN DESCRIBED OR SHOWN ON THE DRAWINGS, THE CONTRACTOR ASSUMES THE FULL RESPONSIBILITY IMPOSED BY THE GUARANTEE AS SET FORTH HEREIN, AND SHALL PROTECT HIMSELF THROUGH PROPER GUARANTEES FROM EQUIPMENT VENDORS AND FROM SUBCONTRACTORS AS THEIR INTERESTS MAY APPEAR.

1. THAT THE ENTIRE MECHANICAL SYSTEMS SHALL BE QUIET IN OPERATION.
2. THAT THE CIRCULATION OF WATER SHALL BE COMPLETE AND EVEN INCLUDING THE DOMESTIC HOT WATER SYSTEM.
3. THAT HE WILL MAKE PROMPTLY UPON NOTICE, FREE OF CHARGE, ANY REPAIRS NECESSARY DUE TO DEFECTIVE MATERIALS OR MATERIALS OR WORKMANSHIP THAT MAY OCCUR DURING A PERIOD OF ONE YEAR FROM THE DATE OF SUBSTANTIAL COMPLETION. FIVE YEARS FOR AIR CONDITIONING COMPRESSORS.

MECHANICAL INSULATION SCHEDULE

NOTES:

ALL INSULATION SHALL HAVE SURFACE BURNING CHARACTERISTICS, AS TESTED BY ASTM E84, UL723 OR NFPA 255 NOT EXCEEDING : FLAME SPREAD 25 AND SMOKE DEVELOPED 50.

COMPOSITE SHALL INCLUDE INSULATION JACKETING AND ADHESIVES USE TO SECURE JACKETING OR FACING. ALL ACCESSORY ITEMS SUCH AS PVC JACKETING AND FITTINGS, ADHESIVES, MASTIC, CEMENT, TAPE AND CLOTH SHALL HAVE SAME COMPONENT RATING AS ABOVE.

THERMAL DUCT WRAP:

FIBERGLASS BLANKET INSULATION: THERMAL CONDUCTIVITY OF 0.28 BTU-INPER SQ FT PER HOUR AT 75 DEG F MEAN TEMPERATURE. MINIMUM DENSITY OF ONE POUND PER CUBIC FOOT. JACKETED WITH ALUMINUM FOIL REINFORCED WITH FIBERGLASS SCRIM LAMINATED KRAFT FACING.

THERMAL DUCT WRAP INSTALLATION:

WRAP ALL SUPPLY, RETURN, AND OUTSIDE AIR WITH 1-1/2" DUCT WRAP IN ACCORDANCE WITH MANUFACTURERS INSTALLATION INSTRUCTIONS. DUCT THAT ARE INTERNALLY LINED NEED NOT BE WRAPPED.

DUCTWORK IN UNCONDITIONED SPACES

ALL DUCTWORK RUNNING THROUGH UNCONDITIONED SPACES MUST HAVE A MINIMUM R-12 INSULATION.

SEISMIC BRACING SUBMITTAL REQUIREMENTS

THE CONTRACTOR SHALL BE RESPONSIBLE FOR THE DESIGN AND INSTALLATION OF ALL REQUIRED SEISMIC BRACING BY THE 2018 INTERNATIONAL BUILDING CODE, SECTION 1613 EARTHQUAKE LOADS, PARAGRAPH 1613.1 SCOPE. RESTRAINT MUST BE PROVIDED FOR THE FOLLOWING CONDITIONS, UNLESS OTHERWISE EXCLUDED BY CHAPTER 13 OF ASCE 7-10: (1) Ip>1.0, (2) MEP COMPONENTS > 400 POUNDS AND SUPPORTED BY A FLOOR OR ROOF: (3) MEP COMPONENTS > 20 POUNDS AND SUPPORTED BY A CEILING OR WALL: OR (4) MEP DISTRIBUTION SYSTEM WEIGHING > 5 PLF.

THE CONTRACTOR SHALL PROVIDE A COMPLETE SUBMITTAL FOR ALL MEP EQUIPMENT TO INCLUDE LOCATION OF EACH SEISMIC BRACE, TYPE AND DESIGN OF THE BRACING, AND A DETAIL OF THE SEISMIC BRACING. THE SUBMITTAL SHALL BE ON 36"x24" SHEETS AND A SCALE OF 1/4" = 1'-0", ALONG WITH A COMPLETE SET OF CALCULATIONS.

THE SUBMITTAL SHALL CLEARLY INDICATE WHICH ITEMS ARE REQUIRED TO BE BRACED AND THE MINIMUM BRACING REQUIREMENTS (E.G. PER IBC 103.1 AND CHAPTER 13 OF ASCE 7-10). IN ADDITION THE SUBMITTAL SHALL BE PROVIDED BY A LICENCED PROFESSIONAL ENGINEER LICENCED IN UTAH.

UNDER NO CONDITIONS SHALL ANY MECHANICAL OR ELECTRICAL COMPONENTS BE INSTALLED UNTIL SUCH TIME AS THE LEHI CITY BUILDING DEPARTMENT HAS REVIEWED AND APPROVED THE SUBMITTAL.

GENERAL NOTES

COORDINATE ALL SUSPENDED EQUIPMENT WITH ARCHITECTURAL REFLECTED CEILING PLAN.

IT IS THE RESPONSIBILITY OF THE MECHANICAL CONTRACTOR TO COORDINATE HIS WORK WITH ALL OTHER TRADES.

COORDINATE ALL ROOF MOUNTED MECHANICAL EQUIPMENT WITH STRUCTURAL PLANS. THE MECHANICAL CONTRACTOR SHALL BE RESPONSIBLE FOR ADDITIONAL STRUCTURE REQUIRED TO SUPPORT THE EQUIPMENT IF EQUIPMENT WEIGHT AND DIMENSIONS EXCEED WHAT HAS BEEN SCHEDULED AND SHOWN ON THE DRAWINGS.

COORDINATE ALL ROOF PENETRATIONS WITH STRUCTURAL DRAWINGS.

ALL DUCT SIZES ARE CLEAR INSIDE DIMENSIONS. INCREASE SIZES AS REQUIRED FOR DUCT LINER.

ALL EQUIPMENT DESIGNED TO BE FIXED IN POSITION SHALL BE SECURELY FASTENED IN PLACE.

ALL QUESTION MUST BE SUBMITTED TO THE ARCHITECT IN THE FORM OF AN RFI. ANY RFI SENT DIRECTLY TO ENGINEER WILL BE RETURNED UNREAD.

ANY RFI's THAT HAVE BEEN CORRECTED OR APPROVED BY THE ENGINEER WILL BE JUST FOR CLARIFICATION, AND DOES NOT CONSTITUTE A CHANGE ORDER.

CHANGE ORDERS MUST BE SUBMITTED TO THE ARCHITECT, THE CHANGE ORDER SHALL BE COMPLETE BY LISTING THE FINAL PRICING WITH PROPER BREAKDOWN AND DOCUMENTATION. POSSIBLE TIME EXTENSION OR DELAY AND THE ASSOCIATED COST FOR THE TIME EXTENSION OR DELAY. MATERIAL AND LABOR COST.

RFI's WITH BE RETURNED TO ARCHITECT FROM ENGINEER WITHIN 5 WORKING DAYS.

CHANGE ORDERS WILL BE RETURNED TO ARCHITECT FROM ENGINEER WITHIN 15 DAYS.

DO NOT PROCEED WITH RFI UNTIL CHANGE ORDER HAS BEEN APPROVED BY ARCHITECT, OWNER AND ENGINEER. IF CONTRACTOR DOES SO IT WILL BE AT THERE OWN RISK.

IF TIME EXTENSIONS AND/OR DELAYS ARE INCURRED DUE TO FAILURE TO ISSUE AN RFI, CHANGE REQUEST, CHANGE ORDER, OR IMPROPER AND/OR INCOMPLETE DOCUMENTATION THE COST ASSOCIATED WITH THE DELAY WILL BE BORNE BY THE CONTRACTOR.

MECHANICAL CALLOUT

EF-6 / 600	SYMBOL / CAPACITY	EQUIPMENT
RT	ROOFTOP AIR CONDITIONING UNIT	
EF	EXHAUST FAN	
9x9-4 CD / 175	SIZE / TYPE / PATTERN / CFM	DIFFUSER OR GRILLE
CD	CEILING DIFFUSER (LAY-IN CEILING)	
EG-1	EXHAUST AIR GRILLE (GYPSUM CEILING)	
RG	RETURN AIR GRILLE (LAY-IN CEILING)	

SYMBOL LEGEND

SYMBOL	DESCRIPTION
	SUPPLY AIR (S.A.)
	RETURN AIR (R.A.)
	TURNING VANES
MD	MANUAL DAMPER
FD	FIRE DAMPER
SD	SMOKE DAMPER
	EXISTING DUCTWORK

DALE R. WILDE CO.
CONSULTING ENGINEERS
428 WINCHESTER SUITE 240
SALT LAKE CITY, UTAH 84107
PHONE 801-433-1125 - EMAIL WILDE@DRWCO.COM

VELOCIRAX T.I.

850 East Mill Pond Drive
Lehi, Utah

REGISTERED PROFESSIONAL ENGINEER
155864-2202
DALE R. WILDE JR.
11-23-2022
STATE OF UTAH

MECHANICAL NOTES

rev.	date
1	
2	
3	
4	
5	
6	

M2.1

NOVEMBER 15, 2022

DIFFUSER AND GRILLE SCHEDULE

NOTES:
DIFFUSER SIZING IS BASED ON AIR BEING INTRODUCED AT 25 DEGREES F. TEMPERATURE DEFERENTIAL, AND AIR BEING DIFFUSED AT THE FIVE-FOOT LEVEL TO A VELOCITY NOT GREATER THE 50 FPM. DIFFUSER SELECTED SO AS NOT TO EXCEED THE NC-30 CURVE.

REGISTER AND GRILLES SIZING IS SELECTED SO AS NOT TO EXCEED THE NC-30

MANUFACTURER SHALL GUARANTEE TO MEET THE ABOVE PERFORMANCE FACTORS AND REPLACE ALL DIFFUSERS WHERE REQUIRED

SYMBOL	DESCRIPTION
CD	CEILING SUPPLY DIFFUSER SQUARE PLAQUE TYPE SUPPLY DIFFUSER 4 FULLY ADJUSTABLE CONES MINIMUM FRAME FOR MOUNTING IN 24" x 24" T-BAR CEILING WHITE POWDER COAT FINISH ALL ALUMINUM CONSTRUCTION SIZE AND DIFFUSION PATTERN ON THE DRAWINGS CARNES SHPA KRUEGER PLQ METAL-AIRE 5750 PRICE ASPD TITUS DAT TUTTLE AND BAILEY T1100
EG-1	CEILING EXHAUST GRILLE SQUARE PLAQUE TYPE SUPPLY DIFFUSER FRAME FOR MOUNTING IN GYPSUM BOARD CEILING WHITE POWDER COAT FINISH ALL ALUMINUM CONSTRUCTION GRILLE SIZE ON THE DRAWINGS CARNES SHPA KRUEGER PLQ METAL-AIRE 5750 PRICE ASPD TITUS DAT TUTTLE AND BAILEY T1100
RG	CEILING RETURN GRILLE SQUARE PLAQUE TYPE RETURN GRILLE 24" x 24" OR 24" x 12" FACE FRAME FOR MOUNTING IN 24" x 24" T-BAR CEILING WHITE POWDER COAT FINISH ALL ALUMINUM CONSTRUCTION SIZE AND DIFFUSION PATTERN ON THE DRAWINGS CARNES SHPA KRUEGER PLQ METAL-AIRE 5750 PRICE ASPD TITUS DAT TUTTLE AND BAILEY T1100

ROOF MOUNTED EXHAUST FAN

SYMBOL	EF-1
MANUFACTURER	COOK
MODEL NUMBER	ACE-B 70C2B
MIN. AIR FLOW (CFM)	180
STATIC PRESSURE	0.125
BHP	0.05
FAN RPM	1110
TIP SPEED	2906
SONES	4.7
ELECTRICAL	
V/P/H	120/60/1
HP	1/6
DIMENSIONS	
HEIGHT	20-3/16"
DIAMETER	23-9/16"
WEIGHT	30 LBS.
ROOF OPENING	13-1/2" x 13-1/2"

NOTES

1. BACKDRAPT DAMPER AT ROOF LINE
2. 14" TALL ROOF CURB - RCA-16
3. TO BE CONTROLLED BY A TIME CLOCK

GAS FIRED ROOFTOP A/C UNIT SCHEDULE

SYMBOL	RTU-1
MANUFACTURER	YORK
MODEL NUMBER	ZE072H10D2C5NAA2A1
TONNAGE	6
COOLING PERFORMANCE	
TOTAL GROSS CAPACITY	63.0 MBH
SENSIBLE GROSS CAPACITY	62.7 MBH
TOTAL NET CAPACITY	56.4 MBH
SENSIBLE NET CAPACITY	56.1 MBH
EFFICIENCY (at ARI)	11.00 EER
INTEGRATED EFF. (at ARI)	14.20 IEER
AMBIENT DB TEMP.	95 Deg. F.
ENTERING DB TEMP.	80.8 deg. F.
ENTERING WB TEMP.	60.6 Deg. F.
LEAVING DB TEMP.	56.9 Deg. F.
LEAVING WB TEMP.	52.3 Deg. F.
LEAVING AIR TEMP DEW POINT	49.20 Deg. F.
POWER INPUT (w/o BLOWER)	4.84 Kw
SOUND POWER	83 dB(a)
REFRIGERANT	
REFRIGERANT TYPE	R-410A
SYSTEM 1	6 lbs. 6 oz.
HEATING PERFORMANCE	
ENTERING DB TEMP.	52.4 Deg. F.
HEATING OUTPUT CAPACITY (MAX.)	65.9 MBH
SUPPLY AIR	2850 CFM
HEATING INPUT CAPACITY (MAX.)	82.4 MBH
LEAVING DB TEMP.	77.6 Deg. F.
AIR TEMP. RISE	25.2 Deg. F.
SSE	80.0%
STAGES	1
SUPPLY AIR BLOWER PERFORMANCE	
SUPPLY AIR	2850 CFM
EXT. STATIC PRESSURE	0.65 IWG
ADDL. UNIY LOSSES ((Options/Accessories)	0.3 IWG
BLOWER SPEED	1439 RPM
MAX BHP OF MOTOR (including service factor)	3.45 HP
DUCT LOCATION	BOTTOM
MOTOR RATING	3.00 HP
ACTUAL REQUIRED BHP	2.24 HP
POWER INPUT	1.93 HP
ELEVATION	4300 ft.
DRIVE TYPE	BELT
ELECTRICAL DATA	
POWER SUPPLY	230-3-60
UNIT MIN. CIRCUIT AMPACITY	37.2 amps
UNIT MAX. OVER-CURRENT PROTECTION	50 amps
SMOKE DETECTOR	YES
DIMENSIONS AND WEIGHT	
HEIGHT	33"
LENGTH	83"
WIDTH	45"
WEIGHT WITH FACTORY INSTALLED OPTIONS	775 LBS
CLEARANCES	
RIGHT	24"
FRONT	32"
BACK	12"
LEFT	24"
TOP	72"
BOTTOM	0"

NOTES	
1	95 Deg. F. AMBIENT AIR TEMPERATURE
2	ENTERING AIR TEMP. 80 Deg. F. DB - 67 Deg. F. WB
3	SET THERMOSTATS w/5 Deg. DEADBAND
4	THERMOSTAT LOCKING COVERS
5	CO2 SENSOR
6	FAN AND FILTER SWITCH
7	HONEYWELL T7300T SEVEN DAY PROGRAMMABLE THERMOSTAT
8	LOW AND HIGH PRESSURE SWITCHES
9	PHASE MONITOR
10	AUTOMATIC SHUT DOWN
11	100% OUTSIDE AIR ENTHALPY CONTROLLED ECONOMIZER
12	100% MODULATING POWER RELIEF FAN
13	LOW AMBIENT CONTROL TO 0 Deg. F.
14	NON RECYCLE TIMER
15	ALL ROOFTOP UNIT ARE TO BE PROVIDE WITH A DISCONNECT
16	ALL ROOFTOP HEATING AND COOLING UNITS TO BE SUPPLIED WITH AN UN-CIRCUITED CONVENIENCE OUTLET.
17	SMOKE DETECTOR IN RETURN AIR DUCT ON ALL ROOFTOP UNITS OVER 2000 CFM
18	INTERMITTENT IGNITION
19	LOW LEAK DAMPERS
20	14" TALL ROOF CURB
21	2" PLEATED FILTERS
22	OUTSIDE AIR INTAKE RAIN HOOD

DALE R. WILDE CO.
CONSULTING ENGINEERS
428 WINCHESTER SUITE 240
SALT LAKE CITY, UTAH 84107
PHONE 801-433-1125 - EMAIL WILDE@DRWCO.COM

VELOCIRAX T.I.

850 East Mill Pond Drive
Lehi, Utah

REGISTERED PROFESSIONAL ENGINEER
15864-2202
DALE R. WILDE JR.
11-23-2022
STATE OF UTAH

MECHANICAL SCHEDULES

rev.	date
1	
2	
3	
4	
5	
6	

M2.2

NOVEMBER 15, 2022

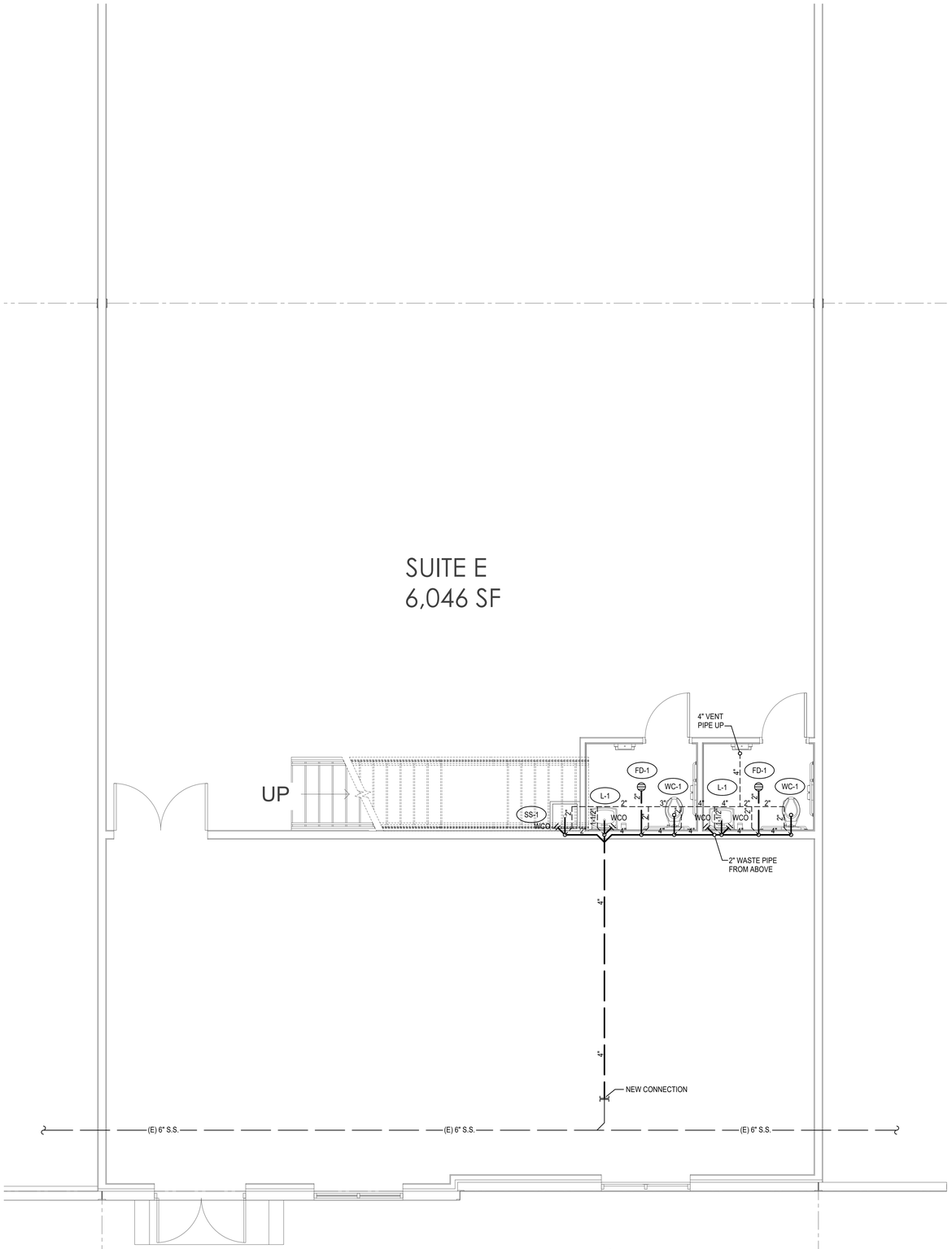

FIRST FLOOR PLAN WASTE AND VENT PIPING

SCALE: 1/4" = 1'-0"

N

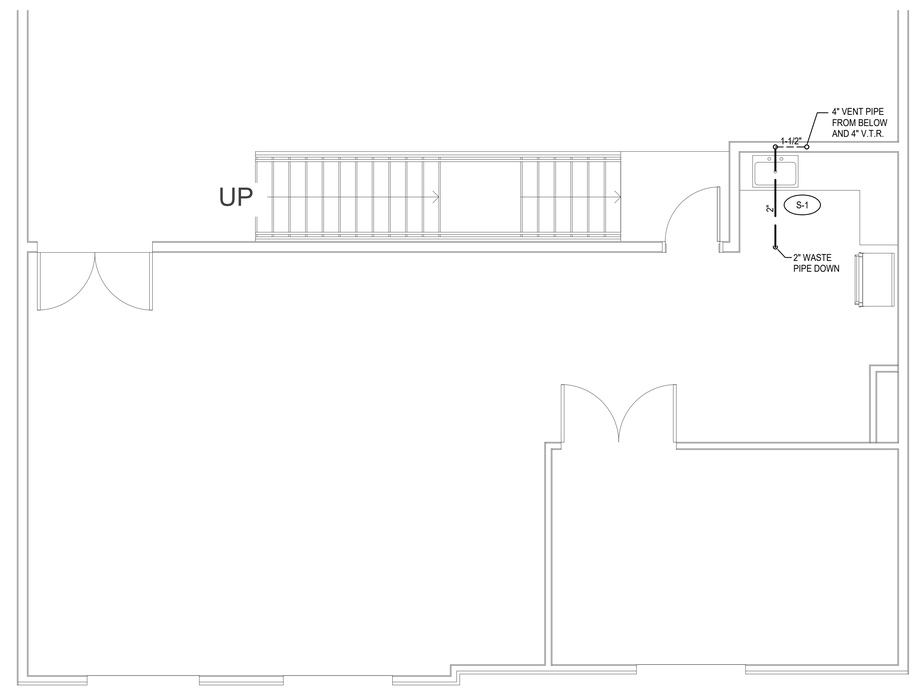

SECOND FLOOR PLAN WASTE AND VENT PIPING

SCALE: 1/4" = 1'-0"

N

PLUMBING LEGEND

SYMBOL	DESCRIPTION	ABBREVIATION
	SOIL OR WASTE (ABOVE FLOOR)	S OR W
	SOIL OR WASTE (BELOW GRADE OR FLOOR)	S OR W
WCO	WALL CLEAN OUT	WCO
FCO	FLOOR CLEAN OUT	FCO
CO	CLEAN OUT	CO
COTG	CLEAN OUT TO GRADE	COTG
	VENT	V
	VENT THRU ROOF	VTR
	COLD WATER	CW
	HOT WATER	HW
	RECIRCULATING HOT WATER	RHW
G	NATURAL GAS	G
	BACKFLOW PREVENTER	BFP
	BALANCING VALVE	
	BALL VALVE	
	CHECK VALVE	
D	DRAIN	D
	GAS COCK	
	GAS PRESSURE REDUCING VALVE	
	PRESSURE GAUGE	
	RELIEF VALVE	
	STRAINER	
	THERMOMETER	
	THREE WAY MIXING VALVE	
	UNION	

DALE R. WILDE CO.
CONSULTING ENGINEERS
428 WINCHESTER SUITE 240
SALT LAKE CITY, UTAH 84107
PHONE 801-433-1125 - EMAIL WILDE@DRWCO.COM

VELOCIRAX T.I.

850 East Mill Pond Drive
Lehi, Utah

REGISTERED PROFESSIONAL ENGINEER
155864-2202
DALE R. WILDE JR.
11-23-2022
STATE OF UTAH

FLOOR PLAN WASTE AND VENT PIPING

rev.	date
1	
2	
3	
4	
5	
6	

P1.1

NOVEMBER 15, 2022

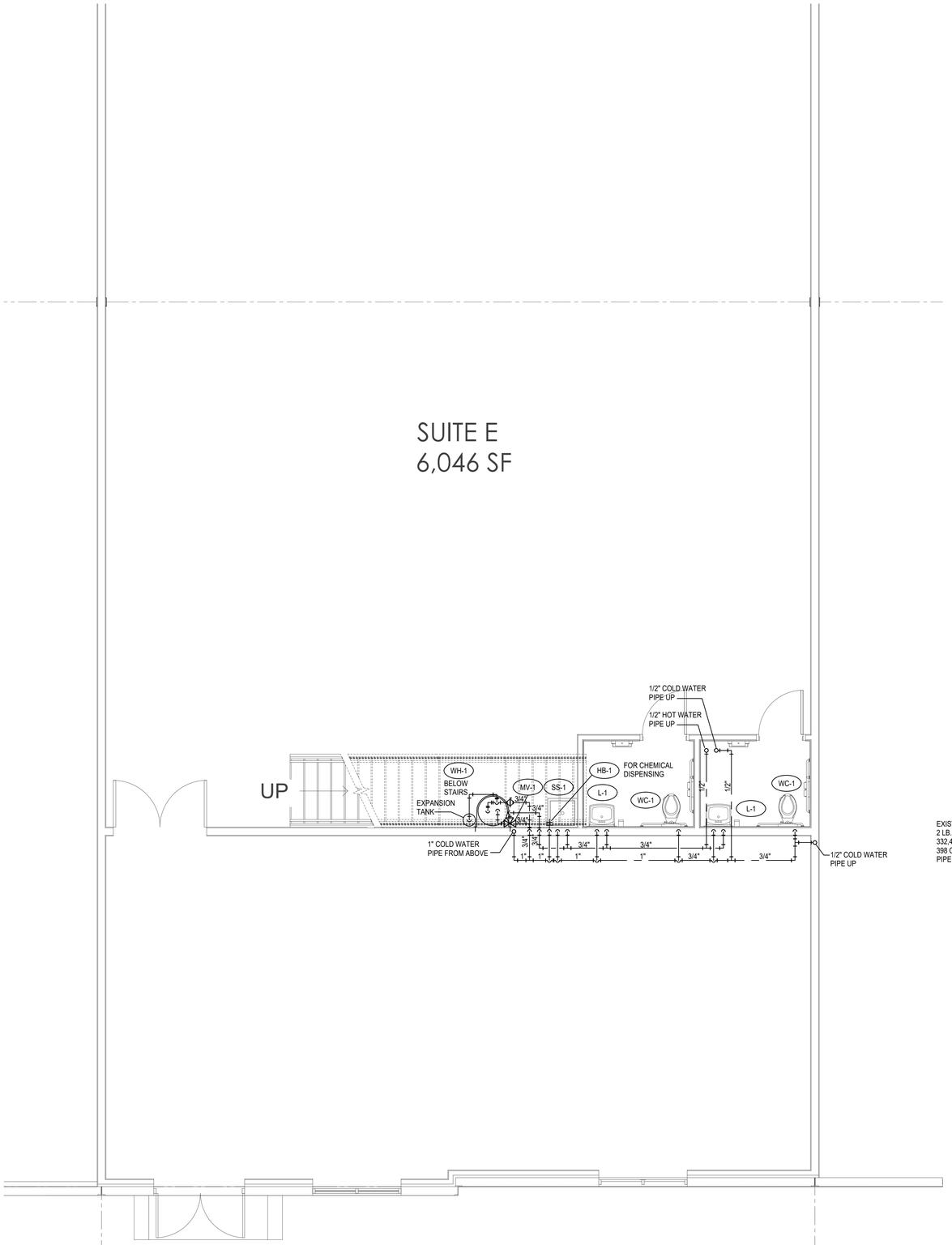

FIRST FLOOR PLAN WATER AND GAS PIPING

SCALE: 1/4" = 1'-0"

N

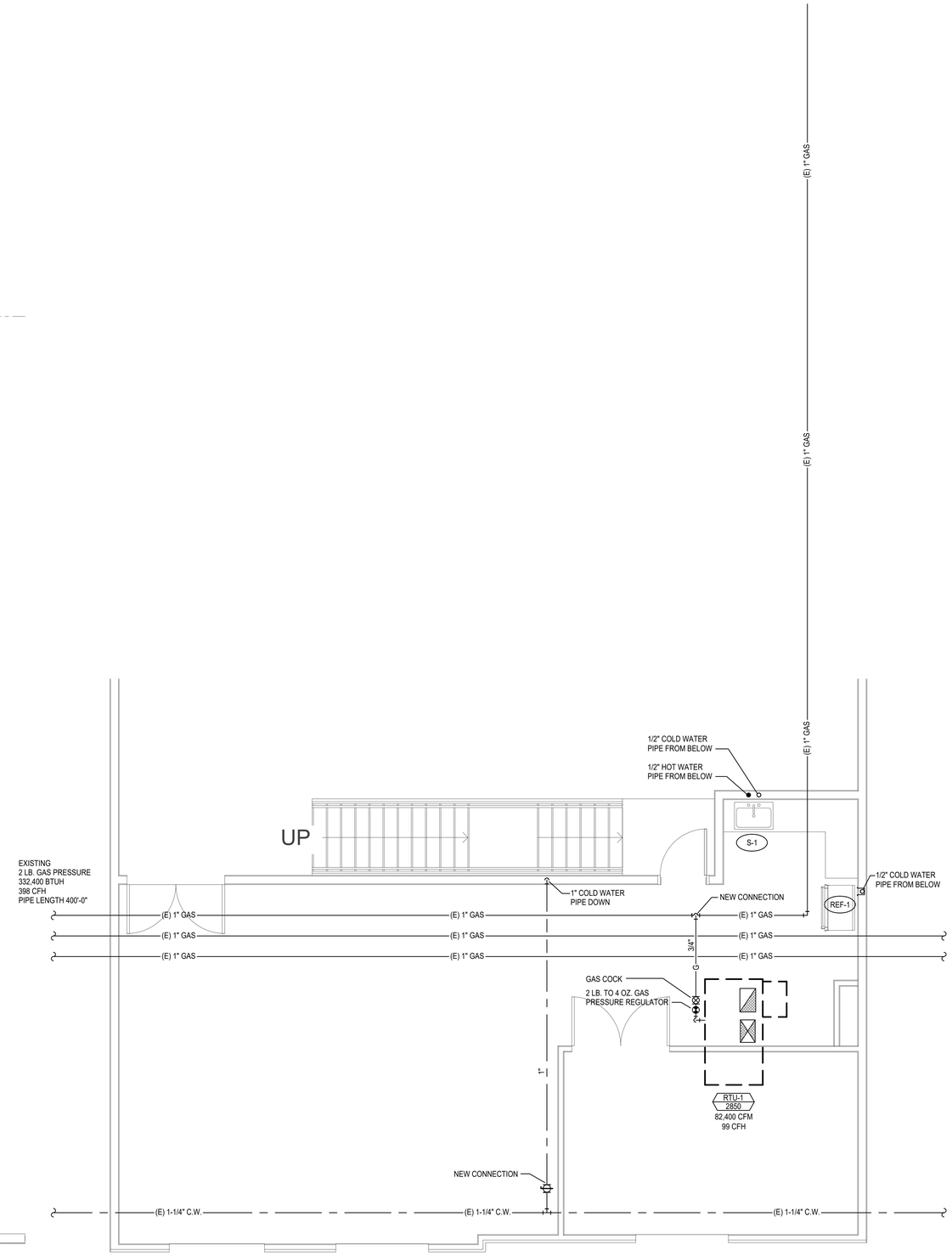

SECOND FLOOR PLAN WATER AND GAS PIPING

SCALE: 1/4" = 1'-0"

N

DALE R. WILDE CO.

CONSULTING ENGINEERS

428 WINCHESTER SUITE 240
SALT LAKE CITY, UTAH 84107
PHONE 801-433-1125 - EMAIL WILDE@DRWCO.COM

VELOCIRAX T.I.

850 East Mill Pond Drive
Lehi, Utah

REGISTERED PROFESSIONAL ENGINEER
DALE R. WILDE JR.
11-23-2022
STATE OF UTAH

FLOOR PLAN
WATER AND
GAS PIPING

rev.	date
1	
2	
3	
4	
5	
6	

P1.2

NOVEMBER 15, 2022

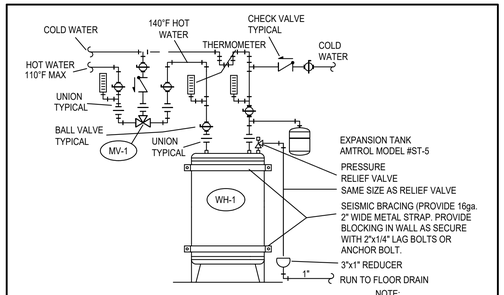

DETAIL WATER HEATER w / MIXING VALE — 1

SCALE: NONE — P2.1

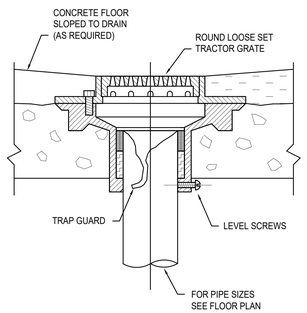

DETAIL FLOOR DRAIN with TRAP GUARD — 2

SCALE: NONE — P2.1

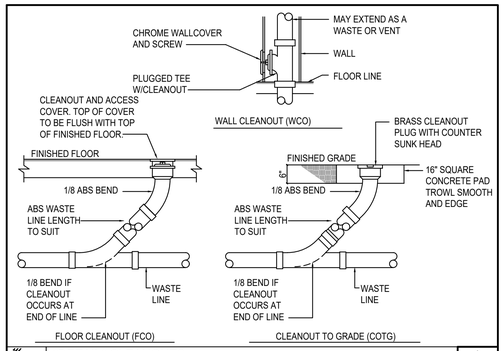

DETAIL CLEANOUTS — 3

SCALE: NONE — P2.1

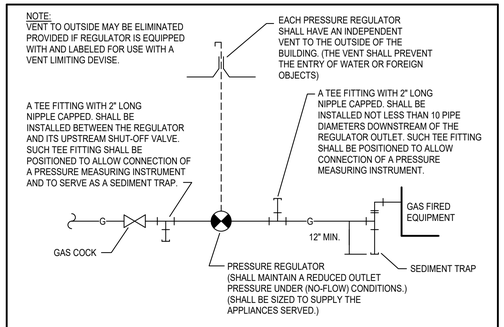

PRESSURE REGULATORS INSTALLED INSIDE BUILDING SHALL BE PROVIDED WITH ACCESS.

DETAIL GAS PRESSURE REGULATOR — 4

SCALE: NONE — P2.1

PLUMBING GENERAL NOTES

CODES RULES AND REGULATIONS:

ALL WORK SHALL CONFORM TO ALL APPLICABLE LOCAL AND STATE CODES.

WHENEVER INDICATED MATERIAL WORKMANSHIP, ARRANGEMENT OR CONSTRUCTION IS OF HIGHER QUALITY OR CAPACITY THAN THAT REQUIRED BY THE ABOVE CODES, THE DRAWING AND OR SPECIFICATION SHALL GOVERN.

SHOULD THERE BE ANY DIRECT CONFLICT BETWEEN THE STATE OR LOCAL CODES, LAWS OR REGULATION AND THE DRAWING AND OR SPECIFICATIONS THE CODES, LAWS OR REGULATIONS SHALL GOVERN.

STANDARDS:

INTERNATIONAL BUILDING CODE 2018 EDITION
INTERNATIONAL PLUMBING CODE 2018 EDITION
INTERNATIONAL MECHANICAL CODE 2018 EDITION
INTERNATIONAL FUEL GAS CODE 2018 EDITION
THE STATE OF UTAH " BOILER AND PRESSURE VESSEL REGULATIONS"

EXAMINATION OF SITE:

THE CONTRACTOR SHALL CAREFULLY EXAMINE THE DRAWINGS AND THE SITE AND FAMILIARIZE THEMSELVES WITH ALL EXISTING CONDITIONS BEFORE SUBMITTING ANY PROPOSAL. NO ADDITION COST WILL BE ALLOWED FOR FAILURE TO VISIT THE SITE.

WORKING DRAWINGS AND MEASUREMENTS:

THESE DRAWINGS ARE GENERALLY DIAGRAMMATIC. THEY DO NOT SHOW EVER OFFSET AND BEND THAT MAY BE NEEDED TO INSTALL THE WORK. THE CONTRACTOR SHALL COORDINATE THE DRAWINGS OF ALL OTHER TRADES INCLUDING BUT NOT LIMITED TO THE CIVIL, ARCHITECTURAL, ELECTRICAL, AND STRUCTURAL. THESE DRAWINGS SHALL NOT BE SCALED FOR ROUGH IN OR AS SHOP DRAWINGS.

EQUIPMENT SUBMITTALS:

PROVIDE ALL AT ONE TIME IN A THREE RING BINDER SIX COPIES OF EQUIPMENT PROPOSED TO BE USED ON THIS PROJECT.

REGARDLESS OF ANY INFORMATION OUTLINED IN THE SUBMITTALS OR SHOP DRAWINGS, THE REQUIREMENTS OF THE DRAWINGS MUST FOLLOWED AND AR NOT WAIVED OR SUPERSEDED IN ANY WAY BY THE SUBMITTALS OR SHOP DRAWING REVIEW.

CAULKING AND SEALING:

ALL SPACES BETWEEN PIPES AND SLEEVES THROUGH FIRE WALLS, FIRE PARTITIONS, FLOORS, AND CEILINGS SHALL CAULKED WITH ONE INCH FILL OF 3M "FIRE BARRIER". CAULKING MUST BE ON BOTH SIDES OF FIRE RATED WALLS.

SUPERVISION AND WORKMANSHIP:

PROVIDE THE SERVICES OF AN EXPERIENCED FORMAN WHO SHALL BE IN CHARGE OF ALL INSTALLATION.

ALL WORKMANSHIP SHALL BE OF FIRST QUALITY. NONE BUT COMPETENT MECHANICS SHALL BE EMPLOYED IN THE WORK. SHODDY WORKMANSHIP WILL BE CAUSE FOR REJECTION AND REPLACEMENT OF WORK WITHOUT ADDITIONAL COST.

COOPERATION WITH OTHER TRADES:

REFER TO ALL THE DRAWINGS COVERING WORK OF ALL TRADES, WHICH IS CARRIED ON IN CONJUNCTION WITH THE WORK SUCH THAT ALL WORK CAN PROCEED WITHOUT INTERFERENCE RESULTING FROM LACK OF COORDINATION.

MANUFACTURERS INSTRUCTIONS:

THE CONTRACTOR SHALL FOLLOW THE MANUFACTURERS INSTALLATION INSTRUCTION EXPLICITLY IN THE INSTALLATION OF ALL ITEMS OF EQUIPMENT.

COMPLETION REQUIREMENTS:

ALL SYSTEMS SHALL BE TESTED BY THE CONTRACTOR TO DEMONSTRATE THE ALL EQUIPMENT FURNISHED AND INSTALLED OR CONNECTED FUNCTION IN THE MANNER REQUIRED.

ADJUSTMENTS, OPERATION, ETC. ADJUST ALL REGULATORS, FAUCETS, ETC. OPEN AND CLOSE ALL VALVES SEVERAL TIMES TO INSURE SEAL.

CLEANING:

THIS CONTRACTOR SHALL CLEAN ALL EXPOSED PIPING, INSULATED MEMBERS, FIXTURES AND EQUIPMENT INSTALLED AND LEAVE READY FOR PAINTING. REFINISH AND DAMAGED FINISH AND LEAVE IN PROPER WORKING ORDER.

GUARANTEE:

BY THE ACCEPTANCE OF AN CONTRACT AWARD FOR THE WORK HEREIN DESCRIBED OR SHOWN ON THE DRAWINGS, THE CONTRACTOR ASSUMES THE FULL RESPONSIBILITY IMPOSED BY THE GUARANTEE AS SET FORTH HEREIN, AND SHALL PROTECT HIMSELF THROUGH PROPER GUARANTEES FROM EQUIPMENT VENDORS AND FROM SUBCONTRACTORS AS THEIR INTERESTS MAY APPEAR.

1. THAT THE ENTIRE PLUMBING SYSTEMS SHALL BE QUIET IN OPERATION.
2. THAT THE CIRCULATION OF WATER SHALL BE COMPLETE AND EVEN INCLUDING THE DOMESTIC HOT WATER SYSTEM.
3. THAT HE WILL MAKE PROMPTLY UPON NOTICE, FREE OF CHARGE, ANY REPAIRS NECESSARY DUE TO DEFECTIVE MATERIALS OR MATERIALS OR WORKMANSHIP THAT MAY OCCUR DURING A PERIOD OF ONE YEAR FROM THE DATE OF SUBSTANTIAL COMPLETION.

THE EXISTING UTILITY CONNECTIONS HAVE BEEN DETERMINED BASED ON THE INFORMATION AVAILABLE. NO DESTRUCTIVE DEMOLITION HAS BEEN PERFORMED TO CONFIRM THE EXISTENCE AND OR LOCATION OF THE EXISTING CONDITIONS. THE CONTRACTOR IS RESPONSIBLE FOR VERIFYING THE EXISTING CONDITIONS PRIOR TO START OF WORK. ANY DIVINATION FROM THE CONDITIONS SHOWN ON THE DRAWINGS SHALL BE BROUGHT TO THE ATTENTION OF THE ARCHITECT FOR EVALUATION AND DIRECTION. THE COST OF REMEDIAL WORK DUE TO FAILURE OF THE CONTRACTOR TO VERIFY THE EXISTING CONDITIONS PRIOR TO THE START OF WORK WILL BE BOURNE BY THE CONTRACTOR.

PLUMBING PIPING SCHEDULE

NOTES:

GRADE ALL DOMESTIC WATER PIPING TO DRAIN. PROVIDE DRAIN AT ALL LOW POINTS WITH HOSE CONNECTION AND CAP. GRADE ALL WASTE AND VENT PIPING TO CONFORM TO THE INTERNATIONAL PLUMBING CODE.

ALL PIPING SHALL BE SUPPORTED WITH CLEVIS HANGERS ON THE FOLLOWING SPACING:

STEEL PIPE 1" AND SMALLER	5 FEET
STEEL PIPE 1-1/4" AND LARGER	10 FEET
COPPER TUBING 1-1/4" AND SMALLER	5 FEET
COPPER TUBING 1-1/2" AND LARGER	10 FEET
PLASTIC PIPE	3 FEET

CAST IRON SOIL PIPE - SUPPORT AT EACH JOINT AND AT INTERVALS NOT TO EXCEED 5 FEET.

HANGER ROD SIZING AS FOLLOWS:

PIPE SIZE	ROD SIZE
1/2" TO 2"	3/8"
2-1/2" TO 3"	1/2"
4" AND LARGER	5/8"

PROVIDE INSULATION PROTECTION SHIELDS AT ALL HANGERS. PROVIDE ISOLATION VALVES AND UNIONS AT ALL EQUIPMENT. PROVIDE DIELECTRIC UNIONS BETWEEN DISSIMILAR PIPE MATERIALS.

BACK FILL AND COMPACT ALL TRENCHING TO PREVENT SETTLEMENT AND TO PROPERLY SUPPORT BELOW GRADE PIPING.

PLASTIC PIPING IN AIR PLENUMS IS PROHIBITED. ALL MATERIAL LOCATED IN AIR PLENUMS MUST HAVE SURFACE BURNING CHARACTERISTICS NOT EXCEEDING FLAME SPREAD 25 AND SMOKE GENERATED 50.

SYMBOL	DESCRIPTION
HW	DOMESTIC HOT WATER PIPING
CW	DOMESTIC COLD WATER PIPING
HWR	DOMESTIC HOT WATER RECIRCULATING PIPING

COPPER TUBE BELOW GRADE:
TYPE K HARD DRAWN COPPER CONFORMING TO ANSI H23.1

COPPER TUBE ABOVE GRADE:
TYPE L HARD DRAWN COPPER CONFORMING TO ANSI H23.1

COPPER TUBE FITTINGS:
2-1/2" AND SMALLER: WROUGHT COPPER, SOLDER JOINT PRESSURE FITTINGS CONFORMING TO ASME B16.22

SOLDER WITH NON LEAD SOLDER IN ACCORDANCE WITH THE REQUIREMENTS OF THE COPPER DEVELOPMENT ASSOCIATION'S "THE COPPER TUBE HANDBOOK" INCLUDING REAMING AND DE-BURRING.

3" AND LARGER: WROUGHT COPPER AND BRONZE GROOVED END FITTINGS CONFORMING TO ASTM B75 TUBE AND ASTM B584 BRONZE CASTINGS.

COUPLING FOR GROOVED END COPPER TUBE AND GROOVED END COPPER FITTINGS CONSISTING OF ASTM A 536 DUCTILE IRON OR ASTM A 47 MALLEABLE IRON HOUSING HAVING COPPER COLORED ENAMEL FINISH WITH SYNTHETIC RUBBER GASKET HAVING CENTRAL CAVITY PRESSURE RESPONSIVE DESIGN AND SUITABLE FOR SERVICE.

W	WASTE PIPING
GW	GREASE WASTE PIPING
V	VENT PIPING

PLASTIC PIPE:
POLY (VINYL CHLORIDE) (PVC)
ASTM D 2665 SOLID CORE SCHEDULE 40 PLAIN ENDS.

ACRYLONITRILE BUTADIENE STYRENE (ABS)
ASTM D 2661 SOLID CORE SCHEDULE 40 PLAIN ENDS

CAST IRON:
SERVICE WEIGHT CAST IRON COATED HUB LESS SOIL PIPE CONFORMING TO THE REQUIREMENTS OF CISPI STANDARD 301, ASTM A888 OR ASTM A74.

PIPE FITTINGS:
PVC: DWV PIPE FITTINGS CONFORMING TO ASTM D 2665 MADE TO ASTM D3311 SOCKET-TYPE DRAIN WASTE AND VENT PIPE PATTERNS.

SOLVENT CEMENTS: ASTM D 2564 AND ASTM F 656 PRIMER

PVC TO ABS TRANSITION ASTM D 3138 COLOR OTHER THAN ORANGE

ABS: DWV PIPE FITTINGS CONFORMING TO ASTM D 2661 SOLID CORE MADE TO ASTM D 3311 SOCKED-TYPE DRAIN WASTE AND VENT PIPE PATTERNS

SOLVENT CEMENT: ASTM D 2235

CAST IRON: HUBLESS CAST IRON CONFORMING TO CISPI 310 HAVING ASTM C 564 NEOPRENE SEALING SLEEVE WITH 300 SERIES STAINLESS STEEL CORRUGATED SHIELD AND CLAMP ASSEMBLY.

G	NATURAL GAS PIPING

STEEL PIPE:
4" AND SMALLER, SCHEDULE 40 OR SCHEDULE 80 BLACK CONFORMING TO ASTM-A53 GRADE A.

SIZE 5" AND LARGER, SCHEDULE 40 OR SCHEDULE 80 BLACK CONFORMING TO ASTM-A53 GRADE F.

STEEL PIPE FITTINGS:
2' AND SMALLER, MALLEABLE THREADED FITTINGS, ANSI B16.3, CLASS 150 STANDARD PATTERN FOR THREADED FITTINGS. THREADS SHALL CONFORM TO ANSI B1.20.1.

2-1/2" AND LARGER, SCHEDULE 40 WROUGHT STEEL WELDING FITTINGS CONFORMING TO ANSI B16.28.

PLUMBING PIPING SCHEDULE

SYMBOL	DESCRIPTION
D	CONDENSATE DRAIN DOMESTIC

TYPE L HARD DRAWN COPPER CONFORMING TO ANSI H23.1

COPPER TUBE FITTINGS:
2-1/2" AND SMALLER: WROUGHT COPPER, SOLDER JOINT PRESSURE FITTINGS CONFORMING TO ASME B16.22

SOLDER WITH NON LEAD SOLDER IN ACCORDANCE WITH THE REQUIREMENTS OF THE COPPER DEVELOPMENT ASSOCIATION'S "THE COPPER TUBE HANDBOOK" INCLUDING REAMING AND DE-BURRING.

PLUMBING INSULATION SCHEDULE

NOTES:

ALL INSULATION SHALL HAVE SURFACE BURNING CHARACTERISTICS, AS TESTED BY ASTM E84, UL723 OR NFPA 255 NOT EXCEEDING : FLAME SPREAD 25 AND SMOKE DEVELOPED 50.

COMPOSITE SHALL INCLUDE INSULATION JACKETING AND ADHESIVES USED TO SECURE JACKETING OR FACING. ALL ACCESSORY ITEMS SUCH AS PVC JACKETING AND FITTINGS, ADHESIVES, MASTIC, CEMENT, TAPE AND CLOTH SHALL HAVE SAME COMPONENT RATING AS ABOVE.

PIPE INSULATION:

FIBERGLASS SECTIONAL PIPE INSULATION: THERMAL CONDUCTIVITY OF 0.23 BUT-IN PER SQ FT PER HOUR AT 75 DEG F MEAN TEMPERATURE. MINIMUM DENSITY OF 2 LBS PER CUBIC FOOT. JACKETED WITH WHITE VAPOR BARRIER LAMINATED OF ALUMINUM FOIL AND WHITE KRAFT REINFORCED WITH GLASS FIBER STRANDS. JACKET SHALL HAVE FACTOR APPLIED SELF-SEALING LAP.

PLASTIC INSULATION FITTING COVERS:

FACTORY FABRICATED FINNTING COVERS MANUFACTURED FROM 30-MIL THICK, HIGH-IMPACT ULTRAVIOLET RESISTANT PVC.

PIPE INSULATION INSTALLATION:

INSTALLATION SHALL BE CONTINUOUS THROUGH WALLS, FLOORS, PARTITIONS, SLEEVES AND PIPE HANGERS.

APPLY INSULATION TO PIPE AND SEAL WITH SELF-SEALING LAP. USE SELF-SEALING BUTT STRIPS TO SEAL BUTT JOINTS. INSULATION NOT REQUIRED OVER UNION, AND VALVE BODIES ON DOMESTIC HOT WATER.

INSTALL PLASTIC FITTING COVERS IN ACCORDANCE WITH MANUFACTURERS INSTALLATION INSTRUCTIONS.

INSULATION INSTALLED OUTSIDE SHOULD BE COVERED WITH ALUMINUM JACKET.

PIPE INSULATION THICKNESS:

INSULATION THICKNESS	RUN OUTS TO 2"	AND LESS	1-1/4" TO 2"	2-/2" TO 4"	5" TO 6"
DOMESTIC HOT WATER	1/2"	1"	1"	1-1/2"	1-1/2"
DOMESTIC HOT WATER RECIRCULATING	1/2"	1"	1"	1-1/2"	1-1/2"
DOMESTIC COLD WATER	1/2"	1/2"	1/2"	1/2"	1/2"

GENERAL NOTES

COORDINATE ALL SUSPENDED EQUIPMENT WITH ARCHITECTURAL REFLECTED CEILING PLAN.

IT IS THE RESPONSIBILITY OF THE PLUMBING CONTRACTOR TO COORDINATE HIS WORK WITH ALL OTHER TRADES.

COORDINATE ALL ROOF PENETRATIONS WITH STRUCTURAL DRAWINGS.

ALL FIXTURES ARE DESIGNED TO BE FIXED IN POSITION SHALL BE SECURELY FASTENED IN PLACE.

ALL QUESTION MUST BE SUBMITTED TO THE ARCHITECT IN THE FORM OF AN RFI. ANY RFI SENT DIRECTLY TO ENGINEER WILL BE RETURNED UNREAD.

ANY RFI's THAT HAVE BEEN CORRECTED OR APPROVED BY THE ENGINEER WILL BE JUST FOR CLARIFICATION, AND DOES NOT CONSTITUTE A CHANGE ORDER.

CHANGE ORDERS MUST BE SUBMITTED TO THE ARCHITECT, THE CHANGE ORDER SHALL BE COMPLETE BY LISTING THE FINAL PRICING WITH PROPER BREAKDOWN AND DOCUMENTATION. POSSIBLE TIME EXTENSION OR DELAY AND THE ASSOCIATED COST FOR THE TIME EXTENSION OR DELAY. MATERIAL AND LABOR COST.

RFI's WITH BE RETURNED TO ARCHITECT FROM ENGINEER WITHIN 5 WORKING DAYS.

CHANGE ORDERS WILL BE RETURNED TO ARCHITECT FROM ENGINEER WITHIN 15 DAYS.

DO NOT PROCEED WITH RFI UNTIL CHANGE ORDER HAS BEEN APPROVED BY ARCHITECT, OWNER AND ENGINEER. IF CONTRACTOR DOES SO IT WILL BE AT THERE OWN RISK.

IF TIME EXTENSIONS AND/OR DELAYS ARE INCURRED DUE TO FAILURE TO ISSUE AN RFI, CHANGE REQUEST, CHANGE ORDER, OR IMPROPER AND/OR INCOMPLETE DOCUMENTATION THE COST ASSOCIATED WITH THE DELAY WILL BE BORNE BY THE CONTRACTOR.

DRAINAGE FIXTURE UNITS

2018 INTERNATIONAL PLUMBING CODE

QTY	FIXTURE TYPE	NOTES	FIXTURE UNITS PER EACH FIXTURE	FIXTURE UNITS PER TOTAL FIXTURE COUNT	MINIMUM SIZE OF TRAP (INCHES)
3	FLOOR DRAIN		2.0	6	2"
1	KITCHEN SINK, DOMESTIC		2.0	2	1-1/2"
2	LAVATORY		1.0	2	1-1/4"
1	SERVICE SINK		2.0	2	1-1/2"
2	WATER CLOSET, PUBLIC (1.6 GPF)	b	4.0	8	NOTE a
TOTAL FIXTURE UNITS				20	
PIPE SIZE				4"	

NOTES

a — TRAP SIZE SHALL BE CONSISTENT WITH THE FIXTURE OUTLET SIZE.

b — FOR THE PURPOSE OF COMPUTING LOADS ON BUILDING DRAINS AND SEWERS, WATER CLOSETS OR URINALS SHALL NOT BE RATED AT A LOWER DRAINAGE FIXTURE UNIT UNLESS THE LOWER VALUES ARE CONFIRMED BY TESTING.

BUILDING DRAINS AND SEWERS

DIAMETER OF PIPE (INCHES)	MAXIMUM NUMBER OF DRAINAGE FIXTURE UNITS CONNECTED TO ANY PORTION OF THE BUILDING DRAIN OR THE BUILDING SEWER, INCLUDING BRANCHES OF THE BUILDING DRAIN. A			
	SLOPE PER FOOT			
	1/16 INCH	1/8 INCH	1/4 INCH	1/2 INCH
1-1/4"			1	1
1-1/2"			3	3
2"			21	26
2-1/2"			24	31
3"		36	42	50
4"		108	216	250
5"		390	480	575
6"		700	840	1,000

THE MINIMUM SIZE OF ANY BUILDING DRAIN SERVING A WATER CLOSET SHALL BE 3 INCHES.

WATER FIXTURE UNITS

2018 INTERNATIONAL PLUMBING CODE

QTY.	FIXTURE	OCCUPANCY	TYPE OF SUPPLY CONTROL	LOAD VALUES, IN WATER SUPPLY FIXTURE UNITS (WSFU) COLD: FIXTURE UNITS PER FIXTURE	COLD: TOTAL FIXTURE UNITS FOR BUILDING	HOT: FIXTURE UNITS PER FIXTURE	HOT: TOTAL FIXTURE UNITS FOR BUILDING	TOTAL: FIXTURE UNITS PER FIXTURE	TOTAL: TOTAL FIXTURE UNITS FOR BUILDING
1	KITCHEN SINK	PRIVATE	FAUCET	1.0	1	1.0	1	1.4	1.4
2	LAVATORY	PUBLIC	FAUCET	1.5	3	1.5	3	2.0	4
1	SERVICE SINK	OFFICE	FAUCET	2.3	2.25	2.3	2.25	3.0	3
2	WATER CLOSET	PUBLIC	TANK TYPE	5.0	10	N/A	N/A	5.0	10
TOTAL FIXTURE UINITS					16.25		6.25		18.4
GALLONS PER MINUTE					19.2				
PIPE SIZE					1"				

NOTES

FOR FIXTURES NOT LISTED, LOADS SHOULD BE ASSUMED BY COMPARING THE FIXTURE TO ONE LISTED USING WATER IN SIMILAR QUANTITIES AND AT SIMILAR RATES/ THE ASSIGNED LOADS FOR FIXTURES WITH BOTH HOT AND COLD WATERE SUPPLIES ARE GIVEN FOR SEPARATE HOT AND COLD WATER LOADS AND FOR TOTAL LOAD, THE SEPARATE HOT AND COLD WATER LOADS BEING THREE-FOURTHS OF THE TOTAL LOAD FO RTHE FIXTURE IN EACH CASE.

NATURAL GAS REQUIREMENTS

QTY.		FIXTURE	BTUH	CFH
1	RTU-1	ROOFTOP UNIT	82,400	99
1	UH-1	EXISTING UNIT HEATER	250,000	299
TOTALS			332,400	398
BUILDING GAS PRESSURE				2 LB.
DEVELOPED PIPE LENGTH				400'-0"
SIZE OF BUILDING GAS MAIN				1"

DALE R. WILDE CO.
CONSULTING ENGINEERS
428 WINCHESTER SUITE 240
SALT LAKE CITY, UTAH 84107
PHONE 801-433-1125 - EMAIL WILDE@DRWCO.COM

VELOCIRAX T.I.
850 East Mill Pond Drive
Lehi, Utah

REGISTERED PROFESSIONAL ENGINEER — DALE R. WILDE JR. — 155864-2202 — 11-23-2022 — STATE OF UTAH

PLUMBING NOTES

rev.	date
1	
2	
3	
4	
5	
6	

P2.1

NOVEMBER 15, 2022

PLUMBING FIXTURE SCHEDULE

SYMBOL	FIXTURE	MANUFACTURER	MODEL NUMBER	WASTE	VENT	HOT WATER	COLD WATER
FD-1	FLOOR DRAIN	JOSAM	30000-Z-S	2"	2"		
		J.R. SMITH	2005-A				
		MIFAB	F1100-C-1				
		WADE	W-1102-STD5-1				
		WATTS DRAINAGE	FD-100-A5				
		ZURN	Z-415				
	PRO-VENT SYSTEM TRAP GUARD	J.R. SMITH	2692				
		MIFAB	TG22IP 2"				
		SOIUX CHIEF	TG22SC				
		WADE	TG22P				
		WATTS DRAINAGE	TG22P-W				
		ZURN	TG22P-Z				
NOTES:		1. CHOOSE ON MANUFACTURER FOR EACH CATEGORY.					
		2. 2" CAST IRON "P" TRAP.					
		3. 5" DIAMETER NICKEL BRONZE STRAINER.					
		4. THE TRAP GUARD IS TO MEET ASSE 1072.					
HB-1	HOSE BIBB (INTERNAL)	WOODFORD	24				3/4"
		CHICAGO FAUCET	387				
		MIFAB	HY9000				
		J.R. SMITH	560				
		T&S	B-0737				
		ZURN	Z1341				
NOTES:		1. CHOOSE ONE MANUFACTURE FOR EACH CATEGORY.					
		2. FOR NON-FREEZING AREA.					
		3. EXTERNAL VACUUM BREAKER.					
		4. ALL BRASS- POLISHED CHROME PLATED.					
		5. LOOSE TEE KEY OPERATION HANDLE					
		6. TAMPER PROOF LOCK SHIELD.					
L-1	LAVATORY (WALL HUNG) A.D.A.	AMERICAN STANDARD	LUCCERNE 0356.028.020	1-1/2"	1-1/2"	1/2"	1/2"
		KOHLER	KINGSTON K-2005				
	FAUCET	AMERICAN STANDARD	RELIANT 7385.004				
		BRIGGS/SAYCO	S1503				
		CHICAGO	420-ABCP				
		DELTA	501-DST				
		KOHLER	K-15583-4RA-CP				
		SYMMONS	S-20-IPS				
		MOEN	L4621				
	MIXING VALVE	ACORN CONTROLS	ST70-12				
	STOPS	NIBCO	7105 ANGLE STOP				
		NIBCO	7100 STRAIGHT STOP				
		WATTS B&T					
	SUPPLY	BRASSCRAFT	CHROME PLATED				
		WATTS B&T	CHROME PLATED				
	PROTECTIVE PIPE COVER	TRUEBRO	120-EZ				
		PLUMBEREX	2003				
	WALL SUPPORT	J.R. SMITH	700				
		MIFAB	MC-41				
		WADE	W-520				
		WATTS DRAINAGE	CA-411				
		ZURN	Z-1231				
NOTES:		1. CHOOSE ONE MANUFACTURE FOR EACH CATEGORY.					
		2. VITREOUS CHINA.					
		3. FAUCET HOLSE AT 4" ON CENTER.					
		4. FAUCET WITH FLOW RESTRICTOR AND AERATOR.					
		5. PROVIDE A ASSE 1070 MIXING VALVE UNDER SINK WITH ACCESS DOOR.					
		6. INTEGRAL PERFORATED GRID DRAIN.					
		7. 17 GA. CHROME PLATED "P" TRAP.					
MV-1	MIXING VALVE	ACORN	MV17			110 DEG. F. 3/4" 140 DEF. F. 3/4"	3/4"
		BRADLEY	S59-2025				
		LAWLER	66-25				
		LEONARD	LV-20-LF				
		SYMMONS	7-200				
NOTES:		1. CHOOSE ONE MANUFACTURE FOR EACH CATEGORY.					
		2. THERMOSTATIC MIXING VALVE. ASSE 1017 CERTIFIED					
		3. COMBINATION STRAINER, CHECK AND STOPS.					
		4. SET TO MIX 140 DEG. F. WATER TO 110 DEG. F.					
		5. SET AT 17 GPM AT 20 P.S.I. DIFFERENTIAL.					
REF-1	REFRIGERATOR CONNECTION	GUY GRAY	FRIB12ABS				1/2"
NOTES:		1. ICE MAKER BOX					
		2. POWERED COATED					
		3. FIRE RATED					
SS-1	SERVICE SINK (FLOOR TYPE)	ACORN	TRH-242410	3"	1-1/2"	1/2"	1/2"
		FIAT PRODUCTS	MSBID 2424				
		FLORESTONE	MSR-2424				
	FAUCET	AMERICAN STANDARD	8354.112.002				
		CHICAGO FAUCET	897-RCF				
		FIAT PRODUCTS	830-AA				
		KOHLER	K-8907				
		T&S BRASS	B-0665-BSTR				
	RIM GUARD	FIAT PRODUCTS	E77AA24				
	MOP HANGER	FIAT PRODUCTS	889-CC				
		T&S BRASS	B-0653				
NOTES		1. CHOOSE ONE MANUFACTURER FOR EACH CATEGORY.					
		2. 24" x 24" BY 10" TALL					
		3. FAUCET WITH FLOW RESTRICTOR AND AERATOR MOUTED AT 42" A.F.F..					
		4. INTEGRAL PERFORATED GRID DRAIN.					
		5. 30" HOSE WITH HOSE HOOK.					
		6. CAST IRON P-TRAP.					

PLUMBING FIXTURE SCHEDULE

SYMBOL	FIXTURE	MANUFACTURER	MODEL NUMBER	WASTE	VENT	HOT WATER	COLD WATER
S-1	SINK COUNTERTOP SINGLE COMPARTMENT	ELKAY	LR-2219	1-1/2"	1-1/2"	1/2"	1/2"
		JUST	SL-1921-A-GR				
		KOHLER	K-3363-1-NA				
	FAUCET GOOSENECK	AMERICAN STANDARD	7190.132				
		CHICAGO FAUCET	50-ABCP				
		ELKAY	LKD2223				
		JUST	JGN-750				
		KOHLER	K-7342-4-S				
	STAINLESS STEEL CUP STRAINER	ELKAY	LK-35				
		JUST	J-35				
	STOPS	NIBCO	7105 ANGLE				
		NIBCO	7100 STRAIGHT				
	SUPPLY	BRASSCRAFT	CHROME PLATED				
		WATTS B&T	CHROME PLATED				
NOTES:		1. CHOOSE ONE MANUFACTURER FOR EACH CATEGORY.					
		2. 18 GAUGE TYPE 302 STAINLESS STEEL, SOUND DEADENED.					
		3. 22" x 19-1/2" BY 7-1/2" DEEP, SINGLE COMPARTMENT.					
		4. SELF-RIMMING.					
		5. ONE FAUCET HOLES.					
		6. FAUCET WITH GOOSENECK, SWING SPOUT, AERATOR AND LEVEL HANDLE.					
		7. CHROME PLATED SUPPLY PIPES AND STOPS.					
		8. 17 GAUGE CHROME PLATED TUBE "P" TRAP.					
WC-1	WATER CLOSET FLOOR TYPE TANK TYPE A.D.A.	AMERICAN STANDARD	215AA.104	4"	2"		1"
		KOHLER	K-3519				
		TOTO	CST744EL				
	SEAT	AMERICAN STANDARD	5901.100				
		BEMIS	1955-C				
		BENEKE	523				
		CHURCH	295C				
		COMFORT SEATS	C106C				
	STOPS	NIBCO	7105 ANGLE				
		NIBCO	7100 STRAIGHT				
	SUPPLY	BRASSCRAFT	CHROME PLATED				
		WATTS B&T	CHROME PLATED				
NOTES:		1. CHOOSE ONE MANUFACTURER FOR EACH CATEGORY.					
		2. 1.28 GALLONS PER FLUSH. TOILET HANDLE TO BE LOCATED ON THE SIDE OF TANK NEAREST THE STALL DOOR.					
		3. VITREOUS CHINA.					
		4. ELONGATED BOWL - TANK TYPE.					
		5. OPEN FRONT SEAT, STAINLESS STEEL HINGE POST AND CHECK.					
		6. CHROME PLATED SUPPLY PIPE AND STOPS.					
WH-1	30 GALLON ELECTRIC WATER HEATER	BRADFORD WHITE	M-1-30U6SS			3/4"	3/4"
		RHEEM	PROE301RH93POU				
		VAUGHN	S30W6-208-1				
	EXPANSION TANK	AMTROL	ST-12				
		ELBI	XT-15				
		WATTS REGULATOR	DET-12				
	PRESSURE RELIEF VALVE	WATTS REGULATOR	40L				
NOTES:		1. CHOOSE ONE MANUFACTURER FOR EACH CATEGORY.					
		2. RECOVERY RATE OF 25 G.P.H. AT A 100 DEGREE F. TEMPERATURE RISE.					
		3. 30 GALLON GLASS LINED STORAGE TANK.					
		4. ENAMELED STEEL JACKET WITH HIGH DENSITY FIBERGLASS INSULATION.					
		5. 150 P.S.I. WORKING PRESSURE.					
		6. 6 K.W. - 208 volt/60 hertz/1 phase					
		7. ASME AND U.L. LISTED.					
		8. SET WATER TEMPERATURE AT 140 DEGREE F.					
		9. 5 YEAR WARRANTY.					
		10. WATER HEATER TO BE 80% EFFICIENCY MIN.					
		11. SEE DETAIL ON DRAWING.					

DALE R. WILDE CO.
CONSULTING ENGINEERS
428 WINCHESTER SUITE 240
SALT LAKE CITY, UTAH 84107
PHONE 801-433-1125 - EMAIL WILDE@DRWCO.COM

VELOCIRAX T.I.

850 East Mill Pond Drive
Lehi, Utah

REGISTERED PROFESSIONAL ENGINEER
DALE R. WILDE JR.
11-23-2022
STATE OF UTAH

PLUMBING SCHEDULE

rev.	date
1	
2	
3	
4	
5	
6	

P2.2

NOVEMBER 15, 2022

ABBREVIATIONS INDEX

ABBREV.	DESCRIPTION	ABBREV.	DESCRIPTION
#	NUMBER	MH	MANHOLE
AC	ALTERNATING CURRENT	MIC	MICROPHONE
A.F.F.	ABOVE FINISH FLOOR	MIN	MINIMUM
AIC	AMPS INTERRUPTING CAPACITY	MTG	MOUNTING
AM	AMPS METER	MTR	MOTOR
AMP	AMPERE	N/A	NOT APPLICABLE
ANN	ANNUNCIATOR	NC	NORMALLY CLOSED
ATS	AUTOMATIC TRANSFER SWITCH	NEC	NATIONAL ELECTRICAL CODE
AUX	AUXILIARY	NEMA	NATIONAL ELECT. MANUFAC. ASSOC.
AWG	AMERICAN WIRE GAUGE	NFPA	NATIONAL FIRE PROTECTION ASSOC.
BC	BARE COPPER	N.I.C.	NOT IN CONTRACT
BFG	BELOW FINISH GRADE	NO	NORMALLY OPENED
C	CONDUIT	NTS	NOT TO SCALE
CAB	CABINET	OS & Y	OUTSIDE SCREW & YOKE
CATB	COMMUNITY ANTENNA TELEVISION	PB	PUSHBUTTON
CATV	CABLE TELEVISION	PF	POWER FACTOR
CKT	CIRCUIT	PFR	PHASE FAILURE RELAY
CLG	CEILING	PNL	PANEL
CNTR	CONTRACTOR	PT	POTENTIAL TRANSFORMER
C.O.	CONDUIT ONLY	PVC	POLYVINYL CHLORIDE CONDUIT
CRT	COMPUTER TERMINAL	(R)	RELOCATE
CT	CURRENT TRANSFORMER	RECEP	RECEPTACLE
CU	COPPER	REQ	REQUIREMENT
C/W	COMPLETE WITH	RLA	RATED LOAD AMPS
DB	DECIBEL	RMP	ROCKY MOUNTAIN POWER
DC	DIRECT CURRENT	RMS	ROOT MEAN SQUARE
DWG	DRAWING	SE	SERVICE ENTRANCE
(E)	EXISTING	SPEC	SPECIFICATIONS
EC	EMPTY CONDUIT	SPKR	SPEAKER
EG	EMERGENCY GENERATOR	SS	SELECTOR SWITCH
EMT	ELECTRICAL METALLIC TUBING	SW	SWITCH
EX	EXPLOSION PROOF	SWBD	SWITCHBOARD
FACP	FIRE ALARM CONTROL PANEL	SWGR	SWITCHGEAR
FC	FOOT CANDLE	TTB	TELEPHONE TERMINAL BOARD
FT	FOOT	TTC	TELEPHONE TERMINAL CABINET
GFI	GROUND FAULT INTERRUPTER	TV	TELEVISION
GND	GROUND	TYP	TYPICAL
GRC	GALVANIZED RIGID CONDUIT	UG	UNDERGROUND
HP	HORSE POWER	UPS	UNINTERRUPTED POWER SUPPLY
HZ	HERTZ	V	VOLT (KV-KILOVOLT)
IFC	INTERNATIONAL FIRE CODE	VA/R	VOLT-AMPS/REACTIVE
IG	ISOLATED GROUND	VM	VOLT METER
IMC	INTERMEDIATE METALLIC CONDUIT	W	WATTS
IN	INCH	W/	WITH
J-BOX	JUNCTION BOX	WH	WATTHOUR METER
KV	KILOVOLT	W/O	WITHOUT
KVA	KILOVOLT AMPERES	WP	WEATHERPROOF
KVAR	KILOVARS	XFMR	TRANSFORMER
KW	KILOWATT	XFMR SW	TRANSFER SWITCH
LRA	LOCKED ROTOR AMPS	XP	EXPLOSION PROOF
LTG	LIGHTING	1P	SINGLE-PHASE
MNF	MANUFACTURER	2P	TWO-POLE
MAX	MAXIMUM	3P	THREE-POLE
MB	MAIN BUS	4P	FOUR-POLE
MCC	MOTOR CONTROL CENTER	∅	PHASE
MCM	1000 CIRCULAR MILLS		

GENERAL NOTES

1. CONSULT ARCHITECTURAL REFLECTED CEILING PLANS FOR EXACT LOCATION OF ALL LIGHTING FIXTURES.
2. VERIFY ALL EQUIPMENT DIMENSIONS AND LOCATIONS BEFORE BEGINNING ROUGH IN. CONSULT ALL APPLICABLE CONTRACT DRAWINGS AND SHOP DRAWINGS TO INSURE NEC CODE CLEARANCES REQUIRED AROUND ALL ELECTRICAL EQUIPMENT.
3. CONTRACTOR SHALL VERIFY ALL ELECTRICAL LOADS (VOLTAGE, PHASE, CONNECTION REQUIREMENTS, ETC) OF ALL EQUIPMENT FURNISHED UNDER ALL DIVISIONS, INCLUDING ALL EXISTING EQUIPMENT TO BE RE-USED. REVIEW ALL SHOP DRAWINGS AND EXISTING EQUIPMENT BEFORE BEGINNING ROUGH-IN.
4. SEE APPLICABLE SHOP DRAWINGS FOR ROUGH IN LOCATION OF ALL EQUIPMENT, WIRING DEVICES, ETC. WHERE APPLICABLE MOUNT ALL WIRING DEVICES ABOVE BACK SPLASH EXCEPT THOSE SERVING UNDER COUNTER EQUIPMENT.
5. FINISHES OF ALL LIGHT FIXTURES SHALL BE AS SELECTED BY ARCHITECT.
6. THE ELECTRICAL CONTRACTOR SHALL NOTIFY AND COOPERATE WITH THE MECHANICAL CONTRACTOR SUCH THAT NO PIPING, DUCTS, OR EQUIPMENT FOREIGN TO THE OPERATION OF THE ELECTRICAL EQUIPMENT SHALL BE PERMITTED TO BE INSTALLED IN, ENTER OR PASS THRU ELECTRICAL ROOMS OR SPACES, OR ABOVE OR BELOW ELECTRICAL EQUIPMENT IN OTHER AREAS.
7. ELECTRICAL BOXES SHALL NOT BE LOCATED IN MASONRY COLUMNS IN BRICK WALLS OR IN GROUTED CELLS ADJACENT TO OPENINGS. COORDINATE LOCATION OF BOXES WITH MASONRY CONTRACTOR.
8. ALL PENETRATIONS OF FIRE RATED FLOORS, WALLS, AND CEILINGS SHALL BE SEALED WITH APPROVED MATERIAL TO MAINTAIN FIRE RATING OF SURFACE PENETRATED.
9. CONTRACTOR SHALL VERIFY FURNITURE LAYOUT PRIOR TO ANY FLOORBOX OR POKE-THRU INSTALLATION. COORDINATE EXACT LOCATION OF FLOOR BOX OR POKE-THRU WITH OWNER AND FURNITURE PROVIDER PRIOR TO ROUGH-IN.
10. ALL BRANCH CIRCUITS INSTALLED AS PART OF THE PROJECT SHALL IDENTIFIED THROUGH COLOUR CODING IN ACCORDANCE WITH NEC 210.5(C)(1)(b).
11. CIRCUITS EXTENDING OVER 70' FOR 120 VOLT AND 115' FOR 277 VOLT 20 AMP CIRCUITS SHALL BE RUN WITH CONDUCTORS PER TABLE BELOW.

20 AMP MINIMUM BRANCH CIRCUIT CONDUCTOR SIZING		
MAXIMUM LENGTH	BRANCH CIRCUIT VOLTAGE	
CONDUCTOR LENGTH (FT)	120 VOLT	277 VOLT
<70	MIN. #12 AWG	MIN. #12 AWG
70 - 115	MIN. #10 AWG	MIN. #12 AWG
115 - 170	MIN. #8 AWG	MIN. #10 AWG
170 - 270	MIN. #6 AWG	MIN. #8 AWG
271 - 380	NOTE B	MIN. #8 AWG
>380	NOTE B	NOTE B

A. THESE ARE BASED ON MAXIMUM LENGTH OF CIRCUIT.

B. PERFORM VOLTAGE DROP CALCULATIONS AND PROVIDE CONDUCTOR SIZE TO KEEP BRANCH CIRCUIT VOLTAGE DROP LESS THAN 3% WITH A 15 AMP LOAD.

C. CONTRACTOR SHALL ENSURE THAT THE INSTALLATION OF EACH BRANCH CIRCUIT STAYS WITHIN 3% VOLTAGE DROP FOR A 15 AMP LOAD. IF NECESSARY,CONTRACTOR SHALL INCREASE WIRE AND CONDUIT SIZE TO MEET THE STANDARD AT NO ADDITIONAL COST TO OWNER.

SYMBOL SCHEDULE

NOTES:

1. SEE FIXTURE SCHEDULE FOR TYPE, MOUNTING AND WATTAGE.
2. HEIGHT MEASURED TO CENTER LINE OF THE BOX FROM THE FINISHED FLOOR.
3. REFER TO DRAWINGS FOR DIRECTIONAL ARROWS.
4. SUBSCRIPT INDICATES FIXTURES TO BE CONTROLLED.
5. NEMA TYPE 'ND' NON-FUSED UNLESS NOTED 'F' (FUSED). USE 'HD' 480 V.
6. HEIGHT MEASURED TO TOP OF THE BOX FROM FINISHED FLOOR.
7. PROVIDE H.O.A. AND S.S. PUSHBUTTONS AS REQUIRED.
8. DOUBLE ARROWS INDICATES A DOUBLE FACE UNIT.
9. DEVICES NOTED WITH AN 'A' INDICATE TO COORDINATE WITH MILLWORK SHOP DRAWINGS AND ELEVATIONS FOR HEIGHT.
10. SUBSCRIPT INDICATES NEMA CONFIGURATION.
11. SOLID BOX AROUND DEVICE INDICATES INSTALLED IN FLOOR. DASHED BOX AROUND DEVICE INDICATES INSTALLED IN CEILING.
12. COORDINATE WITH DOOR HARDWARE SUPPLIER.
13. FOR WATER COOLER LOCATION, SEE DIAGRAM R002. FOR ALL OTHER LOCATIONS, MOUNT AT +16" TO BOTTOM OF BOX FROM FINISHED FLOOR, OR AS NOTED.
14. ARROWS SHOWN ON DEVICE INDICATE SENSOR AIMING DIRECTION.
15. CAMERA NUMBERS ARE SHOWN INSIDE THE CAMERA SYMBOL. CAMERA TYPES ARE INDICATED IN TAG.
16. MOUNT ON TRACK OF OVERHEAD DOOR, 6" FROM TOP OF DOOR, UNLESS OVERHEAD DOOR IS A ROLL UP DOOR, THEN MOUNT PER MANUFACTURER'S INSTRUCTIONS.
17. INSTALL DEVICES PER MANUFACTURER'S INSTALLATION INSTRUCTIONS.
18. DASHED LINE INDICATES EQUIPMENT CLEARANCES. ARROW INDICATES FRONT OF RACK.
19. SPEAKER TO BE MOUNTED IN HORIZONTAL POSITION.
20. MOUNTING HEIGHT IS TO BOTTOM OF DISPLAY.

*TYPICAL SYMBOL SCHEDULE. SOME SYMBOLS MAY NOT BE USED ON THIS SET OF DRAWINGS.

STANDARD MOUNTING HEIGHT UNLESS OTHERWISE NOTED ON PLANS

GENERAL

SYMBOL	DESCRIPTION	MOUNTING HEIGHT	NOTES	SYMBOL	DESCRIPTION	MOUNTING HEIGHT	NOTES
	ONE CIRCUIT, HOME RUN TO PANEL				EQUIPMENT PANEL, SEE DRAWINGS	+72"	6.
	2 CIRCUIT, HOME RUN TO PANEL				CABLE TRAY	AS NOTED	
	3 CIRCUIT, HOME RUN TO PANEL				GROUND BUS BAR	+18"	6.
	CONDUIT RUN CONCEALED IN WALL OR CEILING			X	LIGHT FIXTURE (LETTER DESIGNATES TYPE)		
	CONDUIT RUN CONCEALED IN FLOOR OR GROUND			X X	EQUIPMENT NUMBER		
	CONDUIT UP			X	ARCHITECTURAL ROOM NUMBER		
	CONDUIT DOWN			X	DEVICE / EQUIPMENT (TEXT DESIGNATES TYPE) SEE SCHEDULE		
	CONDUIT STUB LOCATION	CAP CONDUIT		X	DEVICE / EQUIPMENT (TEXT DESIGNATES TYPE) SEE SCHEDULE / LEGEND		
	CONDUIT / CIRCUIT CONTINUATION						

LIGHTING

SYMBOL	DESCRIPTION	MOUNTING HEIGHT	NOTES	SYMBOL	DESCRIPTION	MOUNTING HEIGHT	NOTES
	CEILING LIGHT FIXTURE	CEILING	1.	PP	POWER PACK	ABOVE CEILING	SEE DIAGRAM, SPEC.
	WALL LIGHT FIXTURE	AS NOTED	1.	RC X	DIGITAL ROOM CONTROLLER (SUBSCRIPT INDICATES NUMBER OF RELAYS)	ABOVE CEILING	SEE DIAGRAM, SPEC.
	RECESSED DOWNLIGHT FIXTURE	CEILING	1.	S^3	THREE-WAY SWITCH	+46"	2. 4.
	RECESSED WALL-WASH DOWNLIGHT FIXTURE	CEILING	1.	S^4	FOUR-WAY SWITCH	+46"	2. 4.
	LIGHT FIXTURE	AS NOTED	1.	S^K	KEY OPERATED SWITCH	+46"	2. 4.
	EGRESS LIGHT FIXTURE	AS NOTED	1.	S^D	VARIABLE INTENSITY SWITCH	+46"	2. 4.
	CEILING / WALL MOUNTED EXIT LIGHT	CEILING/ AS NOTED	1. 3. 8.	X	LOW VOLTAGE WALLSTATION (SUBSCRIPT INDICATES CONFIGURATION & CONTROL SEQUENCE)	+46"	2. SEE DIAGRAM, SPEC.
	EMERGENCY LIGHT FIXTURE	AS NOTED	1.		DUAL TECH. CEILING MOUNTED OCCUPANCY SENSOR (PROVIDE WITH ALL PP AND ROOM CONTROLLERS)	CEILING	SEE DIAGRAM, SPEC.
	COMBO EXIT / EMERGENCY LIGHT FIXTURE	AS NOTED	1.		DUAL TECH. WALL MOUNTED OCCUPANCY SENSOR (SUBSCIPT D = DIMMING AND DAYLIGHT CONTROL)	+46"	2. 4. SEE DIAGRAM, SPEC.

POWER

SYMBOL	DESCRIPTION	MOUNTING HEIGHT	NOTES	SYMBOL	DESCRIPTION	MOUNTING HEIGHT	NOTES
	DUPLEX RECEPTACLE UPPER OUTLET SWITCH CONTROLLED	+18" OR AS NOTED	2. 9.	DP	FLAT PANEL DISPLAY WALL BOX TVSS RECEPT., DATA AND OTHER DEVICES, REFER TO DIAGRAMS	AS NOTED	SEE DIAGRAM, SPEC. 26 2726
	SIMPLEX RECEPTACLE	+18" OR AS NOTED	2. 9.	FB	FLOOR BOX - SEE SCHEDULE	FLOOR	SEE DIAGRAM, SPEC.
T	TAMPER-PROOF RECEPTACLE	+18" OR AS NOTED	2. 9.	PT	POKE THRU - SEE SCHEDULE	FLOOR	SEE DIAGRAM, SPEC.
	DUPLEX RECEPTACLE	+18" OR AS NOTED	2. 9. 11.		MOTOR OUTLET	TO SUIT EQUIP.	
U	DUPLEX RECEPTACLE WITH USB OUTLET	+18" OR AS NOTED	2. 9.		PUSHBUTTON	+46"	2.
A	DUPLEX RECEPTACLE		9.		NON-FUSED DISCONNECT SWITCH	+60"	5. 6.
G	5mA GFCI CIRCUIT BREAKER PROTECTED RECEPTACLE		13.	F	FUSED DISCONNECT SWITCH	+60"	5. 6.
WP	WEATHERPROOF RECEPTACLE	+24" OR AS NOTED	2. 9.	B	BREAKER DISCONNECT SWITCH	+60"	5. 6.
IG	ISOLATED GROUND RECEPTACLE	+18" OR AS NOTED	2. 9.	S	MANUAL STARTER THERMAL OVERLOAD SWITCH WITH PILOT LIGHT	+46"	2.
	GROUND FAULT INTERRUPTER DUPLEX RECEPTACLE	+18" OR AS NOTED	2. 9.		MAGNETIC STARTER	+60"	6. 7.
	FOURPLEX RECEPTACLE	+18" OR AS NOTED	2. 9. 11.		MAGNETIC STARTER / DISCONNECT COMBINATION	+60"	6. 7.
	GROUND FAULT INTERRUPTER FOURPLEX RECEPT	+18" OR AS NOTED	2. 9.	VFD	VARIABLE FREQUENCY DRIVE	+66"	6.
	SPECIAL PURPOSE OUTLET	+18" OR AS NOTED	2. 10. W/ CAP.		PANEL BOARD	+72"	6.
M	UTILITY METER / CT CABINET	+72"	6.		MAIN DISTRIBUTION PANEL		

TELECOMMUNICATIONS

SYMBOL	DESCRIPTION	MOUNTING HEIGHT	NOTES	SYMBOL	DESCRIPTION	MOUNTING HEIGHT	NOTES
W	WALL PHONE	+60" OR AS NOTED	2.	WAP WAP	WIRELESS ACCESS POINT, TWO CABLES SOLID = WALL, DASHED = CEILING	WALL / CEILING	11.
	DATA OUTLET, ONE CABLE	+18" OR AS NOTED	2. 9. 11.	SPL	SPLITTER	ABOVE CEILING	
	DATA OUTLET, TWO CABLES	+18" OR AS NOTED	2. 9. 11.	VIA	VIA	ABOVE CEILING	
	DATA OUTLET, THREE CABLES	+18" OR AS NOTED	2. 9. 11.	BDA	FIBER BDA	ABOVE CEILING	
X	DATA OUTLET, "X" INDICATES QUANTITY	+18" OR AS NOTED	2. 9. 11.	ANT XX	ANTENNA PS = PUBLIC SAFETY COM = CELLULAR/COMMERCIAL	CEILING	
	TELEVISION OUTLET	+18" OR AS NOTED	9. 11.				

FIRE ALARM

SYMBOL	DESCRIPTION	MOUNTING HEIGHT	NOTES	SYMBOL	DESCRIPTION	MOUNTING HEIGHT	NOTES
H	FIRE ALARM SIGNAL HORN / STROBE	+94" / CEILING	2.	S	SMOKE DETECTOR	CEILING	
H CLG	CONCEALED FIRE ALARM HORN / STROBE	CEILING		SC	SMOKE/CARBON MONOXIDE DETECTOR	CEILING	
CM	FIRE ALARM CONTROL MODULE			C	CARBON MONOXIDE DETECTOR	CEILING	
MM	FIRE ALARM MONITOR MODULE			H	HEAT DETECTOR	CEILING	
				D	DUCT SMOKE DETECTOR		MTD. IN DUCT

COLOR LEGEND

	LIGHTING FIXTURES		POWER DEVICES		AUDIOVISUAL
	LIGHTING DEVICES		TELECOMMUNICATIONS		SECURITY
	POWER EQUIPMENT		FIRE ALARM		NURSECALL
	CABLE TRAY		CONDUIT		

SHEET INDEX

BNA CONSULTING
4225 Lake Park Blvd, Suite 275
West Valley City, UT 84120
P: 801.532.2196
F: 801.532.2305
www.bnaconsulting.com
SALT LAKE ST. GEORGE

Velicrax TI
S & K INDUSTRIAL
850 WEST MILL POND DRIVE, LEHI, UTAH

REVISIONS

MARK	DATE	DESCRIPTION

DATE:	Issue Date
PROJECT NO:	22419
DRAWN BY:	BNA
CHK'D BY:	BNA

ELECTRICAL SYMBOLS AND NOTES

E001

11/23/2022 1:57:46 PM

LIGHT FIXTURE SCHEDULE

LIGHT FIXTURE ABBREVIATION SCHEDULE			
A.F.F.	ABOVE FINISH FLOOR	SCBA	STANDARD PAINTED COLOR AS SELECTED BY THE ARCHITECT
WALL@CLG	WALL MOUNT AT CORNER OF WALL AND CEILING	CFBA	CUSTOM FINISH AS SELECTED BY THE ARCHITECT
CCBA	CUSTOM PAINTED COLOR AS SELECTED BY THE ARCHITECT	SFBA	STANDARD FINISH AS SELECTED BY THE ARCHITECT

LIGHT FIXTURE GENERAL NOTES

1. REFER TO ARCHITECTURAL REFLECTED CEILING PLANS FOR LOCATIONS OF LIGHT FIXTURES AND, CONFIRM CEILING TYPES WITH LIGHT FIXTURE TRIMS. BRING ALL DISCREPANCIES OF LOCATIONS AND QUANTITIES TO THE ATTENTION OF THE ARCHITECT AND ELECTRICAL ENGINEER PRIOR TO BIDDING.
2. REFER TO ARCHITECTURAL ELEVATIONS FOR MOUNTING HEIGHTS AND LOCATIONS OF LIGHT FIXTURES. BRING ALL DISCREPENCIES TO THE ATTENTION OF THE ARCHITECT PRIOR TO BIDDING.
3. REFER TO THE SPECIFICATIONS FOR OTHER LIGHT FIXTURE, FUSING, LED DRIVERS, AND LAMP REQUIREMENTS AND ACCEPTABLE MANUFACTURERS.
4. CONFIRM AVAILABLE MOUNTING DEPTHS OF ALL LIGHT FIXTURES AND COMPARE WITH DEPTHS SHOWN ON SHOP DRAWINGS. BRING ALL POTENTIAL CONFLICT AREAS TO THE ATTENTION OF THE ARCHITECT AND ELECTRICAL ENGINEER PRIOR TO RELEASE.
5. REFER TO LIGHTING PLANS FOR ALL LINEAR FIXTURE LENGTHS. THE CATALOG NUMBER IS BASED ON THE FIXTURE SPECIFIED AND MAY NOT REFLECT THE QUANTITY OR OVERALL LENGTH OF LINEAR FIXTURES REQUIRED. CONTRACTOR TO NOTE THAT VARIOUS FIXTURE LENGTHS MAY BE REQUIRED TO ACHIEVE THE OVERALL RUN LENGTH.
6. REFER TO LIGHTING PLANS FOR ALL UNDERCABINET FIXTURE LENGTHS. THE CATALOG NUMBER IS BASED ON THE FIXTURE SPECIFIED AND MAY NOT REFLECT THE QUANTITY OR OVERALL LENGTH OF THE UNDERCABINET FIXTURES REQUIRED. CONTRACTOR TO NOTE THAT VARIOUS FIXTURE LENGTHS MAY BE REQUIRED TO ACHIEVE THE OVERALL RUN LENGTH OR TO FIT WITHIN THE MILLWORK. COORDINATE FIXTURE LAYOUT WITH MILLWORK SHOP DRAWINGS PRIOR TO LIGHTING SUBMITTALS.
7. WHEN A CONTRADICTION EXISTS BETWEEN A SPECIFIC MODEL NUMBER AND THE DESCRIPTION, NOTIFY THE ELECTRICAL ENGINEER AND/OR LIGHTING DESIGNER.
8. PRIOR APPROVALS ARE REQUIRED BEFORE BIDDING THE PROJECT AND SHALL BE SUBMITTED TO THE ELECTRICAL ENGINEER'S OFFICE AT LEAST (8) EIGHT WORKING DAYS BEFORE THE BID. PRIOR APPROVALS RECEIVED AFTER THIS TIME PERIOD SHALL BE REJECTED.
9. REFER TO SPECIFICATIONS 20 0500, 26 5100 & 26 5600 (16001, 16510 & 16551).
10. VALUE ENGINEERING CONDUCTED WITHOUT THE DESIGN TEAM IE; ARCHITECT, ENGINEER & LIGHTING CONSULTANT/DESIGNER WILL NOT BE ALLOWED, REVIEWED OR APPROVED.

TYPE	DESCRIPTION	MFR.	CATALOG #	VOLTS	TOTAL WATTS	LAMP TYPE	DELIVERED LUMENS	COLOR TEMP	CRI
D1	4" LED DOWN LIGHT	PORTFOLIO	LD4B-20-D010-EU4B-1020-80-35-4LB-W-1-HE	120 V	21 VA	LED	2,000	3500 K	80+
HB2	LED HIGH BAY, NARROW BEAM, INTEGRAL MOTION SENSOR, 15' WHIP	METALUX	VHB-24-N-UNV-L840-CD-U	120 V	173 VA	LED	24,000	4000 K	80+
HB2E	LED HIGH BAY, NARROW BEAM, INTEGRAL MOTION SENSOR, 15' WHIP, BATTERY BACKUP	METALUX	VHB-24-N-UNV-L840-EL20W-REM-CD-U	120 V	173 VA	LED	24,000	4000 K	80+
L1	2' X 4' LED FLAT PANEL W/ 0-10V DIMMING	METALUX	24FP3835HE	120 V	45 VA	LED	3,850	3500 K	80+
L1E	2' X 4' LED FLAT PANEL W/ 0-10V DIMMING; BATTERY BACKUP	METALUX	24FP3835HE-EL14W	120 V	45 VA	LED	3,850	3500 K	80+
UC1	LED UNDER CABINET FIXTURE W/ ALUMINUM EXTRUSION AND FROSTED LENS. PROVIDE W/ REMOTE POWER SUPPLY MOUNTED ABOVE CEILING. FIXTURE TO RUN ENTIRE LENGTH OF CABINET; COORDINATE W/ MILLWORK SHOP DRAWINGS	LEDCONN	LED: UXXYN-3528H EXTRUSION: LUXLINEAR/NORMAL 1715DRIVER: ZTREM12V60WV	120 V	5 VA	LED	192	3500 K	80+
V1	2' LED LINEAR VANITY FIXTURE W/ BACKPLATE	OXYGEN	3-537-XX	120 V	20 VA	LED	750	3500 K	80+
X1	THERMOPLASTIC EXIT SIGN WITH EMERGENCY BATTERY	SURE-LITE	APX-7-G	120 V	2 VA	LED			

EQUIPMENT SCHEDULE

CONNECTION TYPE NOTES:

1. NON-FUSED DISCONNECT SWITCH
2. FUSED DISCONNECT SWITCH
3. BREAKER IN ENCLOSURE
4. MANUAL STARTER WITH THERMAL OVERLOAD
5. MAGNETIC STARTER
6. MAGNETIC STARTER/NON-FUSED DISCONNECT COMBINATION
7. MAGNETIC STARTER/FUSED DISCONNECT COMBINATION
8. MAGNETIC STARTER/BREAKER COMBINATION
9. VARIABLE FREQUENCY DRIVE
10. REDUCED VOLTAGE STARTER
11. DIRECT CONNECTION
12. RECEPTACLE/SPECIAL PURPOSE OUTLET/ETC.
13. TWO-SPEED STARTER. COORDINATE WITH MOTOR TYPE
14. SOLID STATE SOFT-STARTER

RESPONSIBILITY LEGEND:

A. FURNISHED, INSTALLED AND CONNECTED UNDER DIVISION 26(16)
B. FURNISHED AND INSTALLED UNDER ANOTHER DIVISION. REQUIRED CONNECTION UNDER DIVISION 26(16)
C. FURNISHED UNDER ANOTHER DIVISION BUT INSTALLED AND CONNECTED UNDER DIVISION 26(16)
D. FURNISHED, INSTALLED AND CONNECTED UNDER ANOTHER DIVISION

CB = CIRCUIT BREAKER

NOTE 1: PER 250.122(A), EQUIPMENT GROUND IS NOT REQUIRED TO BE LARGER THAN THE PHASE CONDUCTOR
NOTE 2: OVERCURRENT PROTECTION DEVICE (OCPD) SHOWN IS LOCATED AT POWER PANEL. ALL FUSING TO BE SIZED IN ACCORDANCE WITH FUSE MFR RECOMMENDATION FOR MOTOR NAME PLATE RATING.
NOTE 3: ALL EQUIPMENT TO BE RATED FOR THE ENVIRONMENT FOR WHICH IT IS...

UNIT	#	DESCRIPTION	ELECTRICAL EQUIPMENT INFORMATION								WIRE				OCPD			REMARKS
			LOAD															
			HP	FLA	MCA	VA	VOLTAGE	PHASE	FULL LOAD AMPS	CONDUIT SIZE	SETS	QTY	SIZE	EQ. GROUND	TYPE	AMPS	STARTER/ DISC/ VFD OTHER (SEE NOTES)	
EF	1	EXHAUST FAN	0.00	0 A	0 A	500 VA	120 V	1	4 A	3/4"	1	2	12	12	CB	15 A	4 A	
RTU	1	ROOF TOP UNIT	0.00	37.2 A	0 A	0 VA	208 V	3	37 A	3/4"	1	3	6	8	CB	50 A	2 A	
WH	1	WATER HEATER	0.00	0 A	0 A	6000 VA	208 V	1	29 A	3/4"	1	2	8	10	CB	45 A	2 A	

NOTES:
1. PROVIDE 2-HOLE COMPRESSION LUGS AS REQUIRED.

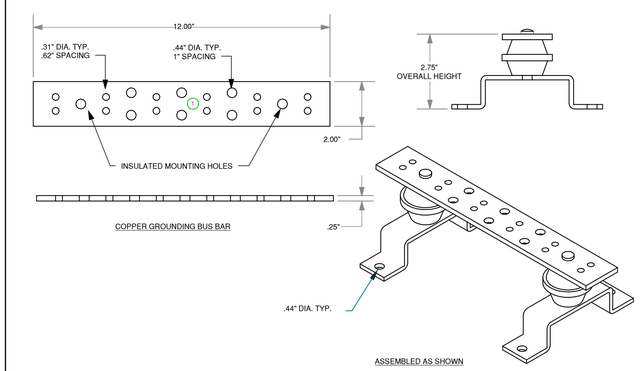

DIAGRAM F019 GROUNDING BUS BAR "IBT"
NTS

NOTES:
TMGB - TELECOMMUNICATIONS MAIN GROUNDING BUS.
IBT - INTERSYSTEM BONDING TERMINAL.
HC - HORIZONTAL CROSS-CONNECT ROOM.
MC - MAIN CROSS-CONNECT ROOM.
TGB - TELECOMMUNICATIONS GROUNDING BUS.
TBB - TELECOMMUNICATIONS BONDING BACKBONE.
BC - BONDING CONDUCTOR.
TR - TELECOMMUNICATIONS ROOM.
EF - ENTRANCE FACILITY.

NOTES:
1. PROVIDE INSULATED GROUNDING BUSHINGS.

BC & TBB CONDUCTOR SIZE
d 25'-#4 CU
d 50'-#1 CU
d 75'-#2/0 CU
> 75'-#3/0 CU

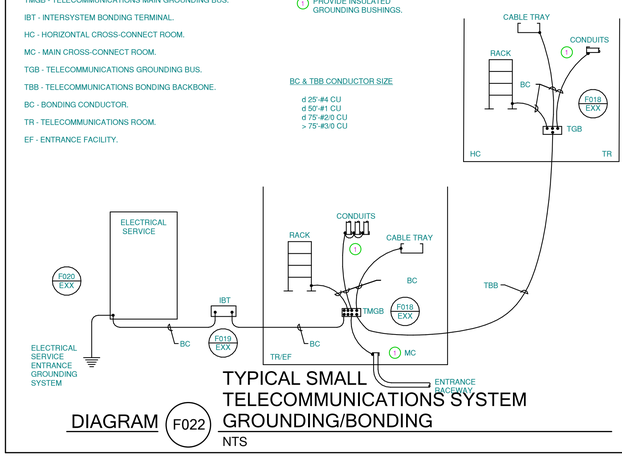

DIAGRAM F022 TYPICAL SMALL TELECOMMUNICATIONS SYSTEM GROUNDING/BONDING
NTS

FLOOR BOX SCHEDULE

TYPE	DESCRIPTION	MFR.	CATALOG NUMBER
FB01	MULTI-SERVICE RECESSED SIX-COMPARTMENT FLOOR BOXES WITH (3) 1-GANG COMPARTMENTS FOR POWER, (1) 1-GANG COMPARTMENT FOR DATA, (1) 1-GANG FOR HDMI, (1) 1-GANG FOR SPARE.	WIREMOLD	EFB6S-SCBA-XX-XX-6CTC2XX
FB02	MULTI-SERVICE RECESSED SIX-COMPARTMENT FLOOR BOXES WITH (3) 1-GANG COMPARTMENTS FOR POWER, (1) 1-GANG COMPARTMENT FOR DATA	WIREMOLD	RFB6-SCBA-XX-XX-6CTC2XX

BNA CONSULTING
4225 Lake Park Blvd, Suite 275
West Valley City, UT 84120
P: 801.532.2196
F: 801.532.2305
www.bnaconsulting.com
SALT LAKE ST. GEORGE

Velicrax TI
850 WEST MILL POND DRIVE, LEHI, UTAH

REVISIONS		
MARK	DATE	DESCRIPTION

DATE:	Issue Date
PROJECT NO:	22419
DRAWN BY:	Author
CHK'D BY:	Checker

SCHEDULES & DIAGRAMS

E002

11/23/2022 1:57:47 PM

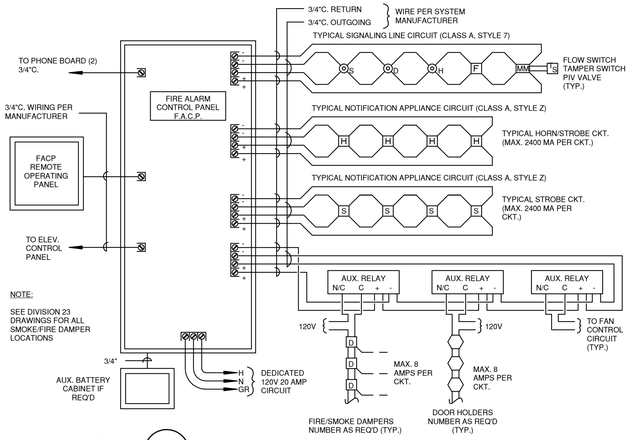

DIAGRAM D002 TYPICAL FIRE ALARM RISER
NTS

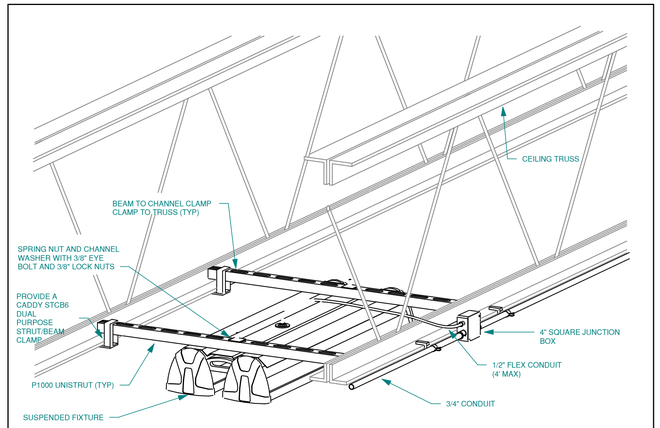

DIAGRAM A025 SUSPENDED LED LIGHT
NTS

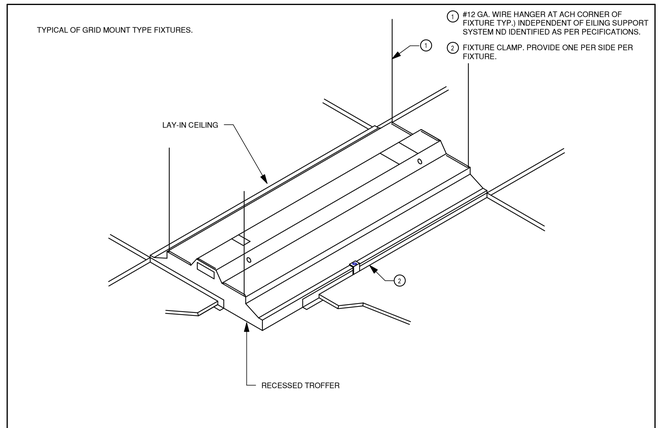

DIAGRAM A001 TYP. RECESSED FIXTURE MOUNTING
NTS

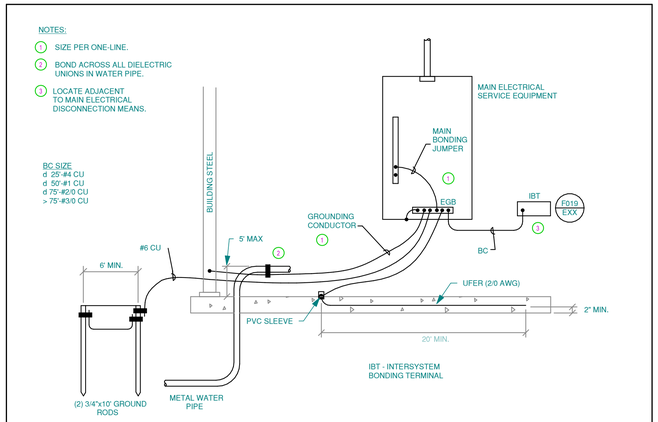

DIAGRAM F020 TYPICAL MAIN ELECTRICAL SERVICE GROUNDING
NTS

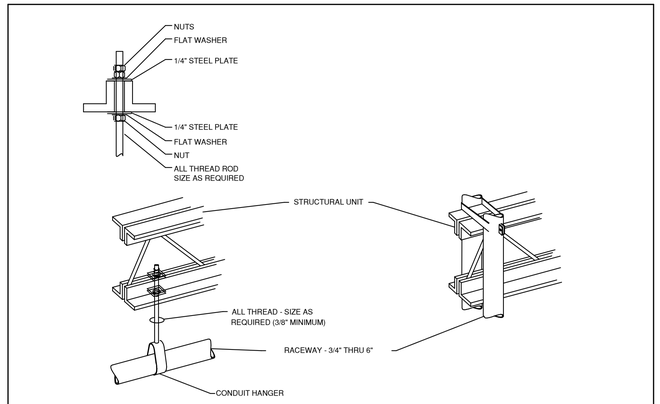

DIAGRAM H003 TYPICAL RACEWAY SUPPORT METHODS
NTS

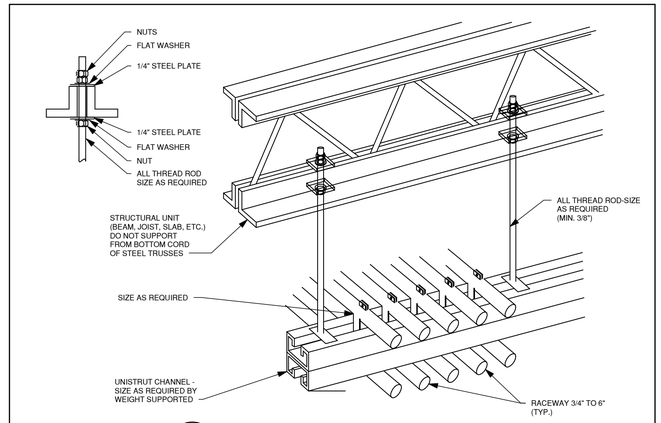

DIAGRAM H001 TYPICAL TRAPEZE CONDUIT RACK
NTS

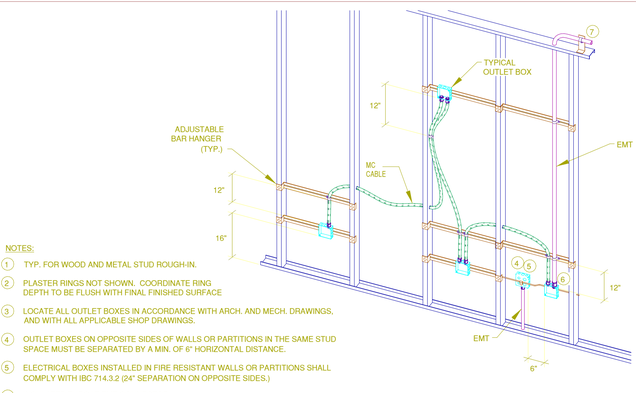

DIAGRAM H013 TYPICAL ROUGH IN REQUIREMENTS FOR MC CABLE
NTS

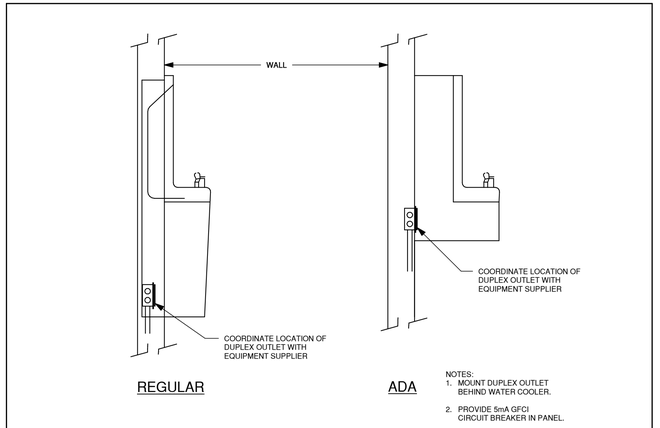

DIAGRAM R002 ELECTRIC WATER COOLER (EWC)
NTS

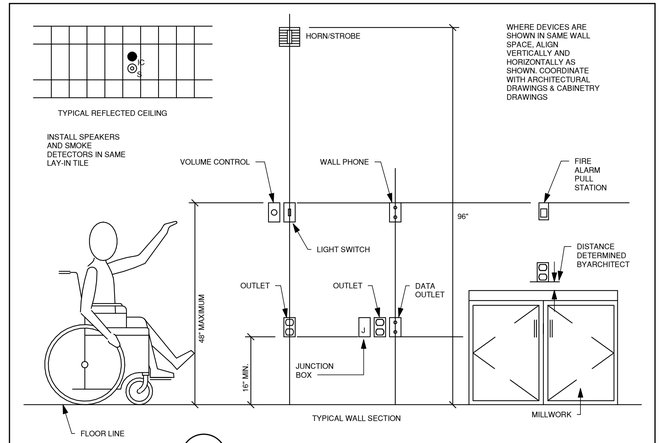

DIAGRAM R001 DEVICE MOUNTING HEIGHTS
NTS

BNA CONSULTING
4225 Lake Park Blvd, Suite 275
West Valley City, UT 84120
P: 801.532.2196
F: 801.532.2305
www.bnaconsulting.com
SALT LAKE ST. GEORGE

Velicrax TI
S & K INDUSTRIAL
850 WEST MILL POND DRIVE, LEHI, UTAH

REVISIONS

MARK	DATE	DESCRIPTION

DATE:	Issue Date
PROJECT NO:	22419
DRAWN BY:	BNA
CHK'D BY:	BNA

ELECTRICAL DIAGRAMS

E003

11/23/2022 1:57:48 PM

COPPER CONDUCTOR & CONDUIT SCHEDULE

TYPE	AMP.	COND. SIZE	CONDUCTOR		INSULATION	EQ. GND. COND.(CU)
			QUAN.	SIZE		
20	30	3/4"	2	10	THHN THWN	10
30	30	3/4"	3	10	THHN THWN	10
40	30	3/4"	4	10	THHN THWN	10
28	40	1"	2	8	THHN THWN	10
38	40	1"	3	8	THHN THWN	10
48	40	1"	4	8	THHN THWN	10
26	55	1"	2	6	THHN THWN	8
36	55	1"	3	6	THHN THWN	8
46	55	1"	4	6	THHN THWN	8
24	70	1"	2	4	THHN THWN	8
34	70	1-1/4"	3	4	THHN THWN	8
44	70	1-1/4"	4	4	THHN THWN	8
23	85	1-1/4"	2	3	THHN THWN	8
33	85	1-1/4"	3	3	THHN THWN	8
43	85	1-1/2"	4	3	THHN THWN	8
32	95	1-1/2"	3	2	THHN THWN	6
42	95	1-1/2"	4	2	THHN THWN	6

ALUMINUM CONDUCTOR & CONDUIT SCHEDULE

TYPE	AMP.	COND. SIZE	CONDUCTOR		INSULATION	EQ. GND COND.(AL)
			QUAN.	SIZE		
31X	120	2"	3	1/0	XHHW-2	4
41X	120	2"	4	1/0	XHHW-2	4
51X	96	2"	5*	1/0	XHHW-2	4
32X	135	2"	3	2/0	XHHW-2	4
42X	135	2"	4	2/0	XHHW-2	4
52X	108	2"	5*	2/0	XHHW-2	4
33X	155	2"	3	3/0	XHHW-2	4
43X	155	2"	4	3/0	XHHW-2	4
53X	124	3"	5*	3/0	XHHW-2	4
34X	180	2"	3	4/0	XHHW-2	4
44X	180	3"	4	4/0	XHHW-2	4
54X	144	3"	5*	4/0	XHHW-2	2
325	205	2"	3	250	XHHW-2	2
425	205	3"	4	250	XHHW-2	2
525	164	3"	5*	250	XHHW-2	2
330	230	3"	3	300	XHHW-2	2
430	230	3"	4	300	XHHW-2	2
530	184	3"	5*	300	XHHW-2	2
335	250	3"	3	350	XHHW-2	2
435	250	3"	4	350	XHHW-2	2
535	200	3"	5*	350	XHHW-2	2
340	270	3"	3	400	XHHW-2	2
440	270	3"	4	400	XHHW-2	2
540	216	3"	5*	400	XHHW-2	2
350	310	4"	3	500	XHHW-2	1
450	310	4"	4	500	XHHW-2	1
550	248	4"	5*	500	XHHW-2	1
375	385	4"	3	750	XHHW-2	1
475	385	4"	4	750	XHHW-2	1
575	308	4"	5*	750	XHHW-2	1

ALUMINUM CONDUCTOR & CONDUIT SCHEDULE FOR PARALLEL RUNS

TYPE	MAX. O.C. PROT.	COND. AMPS	SETS	CONDUCTOR		CONDUIT SIZE	EQ. GND. COND.(AL)
				QUAN.	SIZE		
325-2	400	410	2	3	250	2-1/2"	2/0
425-2	400	410	2	4	250	2-1/2"	2/0
535-2	400	400	2	5*	350	3"	2/0
350-2	600	620	2	3	500	3"	2/0
450-2	600	620	2	4	500	3"	2/0
535-3	600	600	3	5*	350	3"	2/0
340-3	800	810	3	3	400	2-1/2"	3/0
440-3	800	810	3	4	400	3"	3/0
535-4	800	800	4	5*	350	4"	3/0
375-3	1000	1155	3	3	750	4"	4/0
475-3	1000	1155	3	4	750	4"	4/0
535-5	1000	1000	5	5*	350	4"	4/0
350-4	1200	1240	4	3	500	4"	250
450-4	1200	1240	4	4	500	4"	250
550-5	1200	1240	5	5*	500	4"	250
340-6	1600	1620	6	3	400	4"	350
440-6	1600	1620	6	4	400	4"	350
550-7	1600	1736	7	5*	500	4"	350
475-6	2000	2310	6	4	750	4"	400
475-7	2500	2695	7	4	750	5"	600
475-8	3000	3080	8	4	750	5"	600
475-11	4000	4235	11	4	750	5"	750

NOTES:
IN PARALLEL RUNS SIZE GND. COND. IN ACCORDANCE WITH NEC PARA. 250-122.

GND. CONDUCTOR MAY BE DELETED ON SERVICE ENTRANCE CONDUCTORS

* 200% NEUTRAL, DERATED TO 80% BASED ON NEC 310.15.B(5)(C)

** COPPER CONDUCTOR (XHHW)

PROVIDE COMPACT STRANDED ALUMINUM ASSOCIATION 8000 SERIES ALLOY CONDUCTORS.

PROVIDE TERMINATION FOR ALUMINUM ALLOY CONDUCTORS OF HYDRAULIC COMPRESSION TYPE ONLY, LISTED UNDER UL 486-B, MARKED "AL7CU" FOR 75 DEGREE RATED CIRCUITS.

PROVIDE ALL ELECTRICAL EQUIPMENT WITH PROPER SIZING TO ACCOMMODATE ALUMINUM CONDUCTORS. COORDINATE WITH EQUIPMENT SUPPLIER.

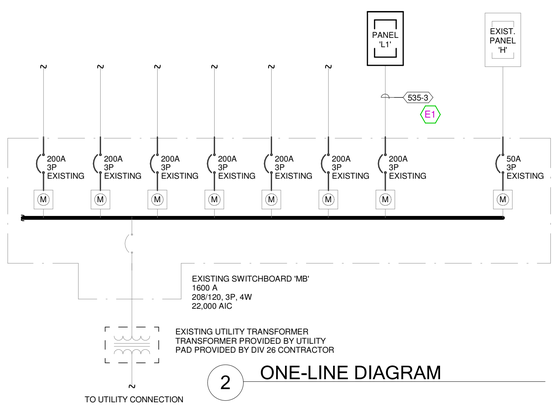

2 ONE-LINE DIAGRAM

SHEET KEYNOTES

E1 TIE INTO EXISTING METER BANK. COORDINATE ROUTING WITH EXISTING BUILDING CONDITIONS.

ELECTRICAL SPECIFICATIONS

ELECTRICAL GENERAL PROVISIONS

- **DESCRIPTION OF WORK**: EXTENT OF ELECTRICAL WORK IS INDICATED ON DRAWINGS. PROVIDE ALL LABOR, MATERIALS, EQUIPMENT, SUPERVISION AND SERVICE NECESSARY FOR A COMPLETE ELECTRICAL SYSTEM. WORK INCLUDES, BUT IS NOT NECESSARILY LIMITED TO THE FOLLOWING ITEMS:
  - ELECTRICAL CONNECTIONS FOR EQUIPMENT
  - GROUNDING
  - CONDUIT RACEWAY
  - CONDUCTORS AND CABLES
  - ELECTRICAL BOXES AND FITTINGS
  - SUPPORTING DEVICES
  - ELECTRICAL SEISMIC CONTROL
  - WIRING DEVICES
  - FLOOR BOXES
  - PANELBOARDS AND SWITCHBOARDS
  - OVERCURRENT PROTECTIVE DEVICES
  - MOTOR AND CIRCUIT DISCONNECTS
  - LIGHT FIXTURES
  - ELECTRICAL IDENTIFICATION
  - FIRE ALARM AND DETECTION SYSTEMS
  - TELECOMMUNICATIONS
- VISIT THE SITE DURING THE BIDDING PERIOD TO DETERMINE EXISTING CONDITIONS AFFECTING ELECTRICAL AND OTHER WORK. ALL COSTS ARISING FROM SITE CONDITIONS AND/OR PREPARATION SHALL BE INCLUDED IN THE BASE BID. NO ADDITIONAL CHARGES WILL BE ALLOWED DUE TO INADEQUATE SITE INSPECTION.
- **QUALITY ASSURANCE:** PERFORM WORK IN ACCORDANCE WITH THE NATIONAL ELECTRICAL CODE (NEC). COMPLY WITH REQUIREMENTS OF STATE AND LOCAL ORDINANCES. OBTAIN ALL PERMITS, INSPECTIONS, ETC. FROM AUTHORITY HAVING JURISDICTION (AHJ). EMPLOY ONLY QUALIFIED CRAFTSMEN WITH AT LEAST THREE YEARS OF EXPERIENCE. WORKMANSHIP SHALL BE NEAT, HAVE A GOOD MECHANICAL APPEARANCE AND CONFORM TO BEST ELECTRICAL STATE CONTRACTING LICENSE. PROVIDE EQUIPMENT AND MATERIAL THAT ARE UNDERWRITERS LABORATORIES INC. (UL) LISTED AND LABELED.
- **SUBMITTALS**: AFTER THE CONTRACT IS AWARDED BUT PRIOR TO MANUFACTURE OR INSTALLATION OF ANY EQUIPMENT, PREPARE COMPLETE SHOP DRAWINGS.
  - PROVIDE SUBMITTALS IN PORTABLE DOCUMENT FORMAT (PDF).
  - DOCUMENTS MUST BE ELECTRONICALLY BOOKMARKED AND KEYWORD SEARCHABLE USING ADOBE ACROBAT (HTTP://WWW.ADOBE.COM/ACROBAT) OR BLUEBEAM REVU (HTTP://WWW.BLUEBEAM.COM) FOR EACH RELEVANT SECTION. (I.E. INCLUDE ELECTRONIC BOOKMARKS SEPARATING "LIGHT FIXTURES" FROM "PANELBOARDS".)
  - ELECTRONICALLY HIGHLIGHT ALL OPTIONS FOR LIGHT FIXTURES, ELECTRICAL EQUIPMENT, ETC. MANUAL HIGHLIGHTING AND SCANNING OF THE DOCUMENTS IS NOT ACCEPTABLE AND WILL NOT BE REVIEWED.
  - PROVIDE ONLY COMPLETED CUTSHEETS FOR ALL FIXTURE AND EQUIPMENT TYPES. BLANK CUTSHEETS SUBMITTED WITH A SCHEDULE ARE NOT ACCEPTABLE AND WILL NOT BE REVIEWED.
  - A MAXIMUM OF ONE SUBMITTAL PER SPECIFICATION SECTION IS ALLOWED. IT IS NOT ACCEPTABLE TO PROVIDE A PRODUCT BY PRODUCT SUBMITTAL. SINGLE PRODUCT BY PRODUCT SUBMITTALS WILL NOT BE REVIEWED.
    - WIRING DEVICES
    - FLOORBOXES
    - PANELBOARDS AND SWITCHBOARDS
    - OVERCURRENT PROTECTIVE DEVICES
    - MOTOR AND CIRCUIT DISCONNECTS
    - LIGHT FIXTURES
    - ELECTRICAL IDENTIFICATION
    - FIRE ALARM AND DETECTION SYSTEMS
    - TELECOMMUNICATIONS
- **RECORD DRAWINGS:** MAINTAIN ON A DAILY BASIS, A COMPLETE SET OF RECORD DRAWINGS, REFLECTING AN ACCURATE DIMENSIONAL RECORD OF ALL BURIED OR CONCEALED WORK. MARK RECORD DRAWINGS TO SHOW THE PRECISE LOCATION OF CONCEALED WORK AND EQUIPMENT, INCLUDING CONCEALED OR EMBEDDED CONDUIT AND JUNCTION BOXES AND ALL CHANGES AND DEVIATIONS IN THE WORK FROM THAT SHOWN ON THE CONTRACT DOCUMENTS.
- **OPERATION AND MAINTENANCE MANUALS:** PROVIDE OPERATING INSTRUCTION AND MAINTENANCE DATA BOOKS FOR ALL EQUIPMENT AND MATERIALS FURNISHED UNDER THIS DIVISION.
- **GUARANTEE:** ENSURE THAT ELECTRICAL SYSTEMS INSTALLED UNDER THIS CONTRACT IS IN PROPER WIRING ORDER AND IN COMPLIANCE WITH DRAWINGS, SPECIFICATIONS, AND/OR AUTHORIZED CHANGES. WITHOUT ADDITIONAL CHARGE, REPLACE ANY WORK OR MATERIALS WHICH DEVELOP DEFECTS, EXCEPT FROM ORDINARY WEAR AND TEAR, WITHIN ONE YEAR FROM THE DATE OF SUBSTANTIAL COMPLETION.
- **FIRE PROTECTION SEALS:** SEAL ALL PENETRATIONS FOR WORK OF THIS SECTION THROUGH FIRE RATED FLOORS, WALLS, AND CEILINGS TO PREVENT THE SPREAD OF SMOKE, FIRE, TOXIC GAS, OR WATER THROUGH THE PENETRATION EITHER BEFORE, DURING AND AFTER FIRE.
- **POWER OUTAGES:** ALL POWER OUTAGES REQUIRED FOR EXECUTION OF THIS WORK SHALL OCCUR DURING THE NON-STANDARD WORKING HOURS AND AT THE CONVENIENCE OF THE OWNER. INCLUDE ALL COSTS FOR OVERTIME WORK IN BID.

ELECTRICAL CONNECTION FOR EQUIPMENT

- VERIFY EXACT LOAD AND LOCATION OF ALL EQUIPMENT BEFORE ROUGH-IN FOR EACH ELECTRICAL CONNECTION. PROVIDE COMPLETE ASSEMBLY OF MATERIAL, INCLUDING BUT NOT NECESSARILY LIMITED TO, RACEWAYS, CONDUCTORS, CORDS, CORD CAPS, PLUGS, WIRING DEVICES, PRESSURE CONNECTORS, TERMINALS (LUGS), ELECTRICAL INSULATING TAPE, HEAT-SHRINKABLE INSULATING TUBING, CABLE TIES, SOLDERLESS WIRE NUTS, AND OTHER ITEMS AND ACCESSORIES AS NEEDED TO COMPLETE SPLICES, TERMINATIONS, AND CONNECTIONS AS REQUIRED. FOR PERMANENTLY INSTALLED FIXED EQUIPMENT, PROVIDE FLEXIBLE SEAL-TITE CONNECTION. FOR MOVABLE AND/OR PORTABLE EQUIPMENT, PROVIDE WIRING DEVICE, CORD CAP, AND MULTI-CONDUCTOR CORD.

GROUNDING

- PROVIDE GROUNDING AND BONDING OF ALL ELECTRICAL AND COMMUNICATION APPARATUS, MACHINERY, APPLIANCES, BUILDING COMPONENTS, AND ITEMS REQUIRED BY THE NEC TO PROVIDE A PERMANENT, CONTINUOUS LOW IMPEDANCE, GROUNDING SYSTEM. PROVIDE AN NEC BONDING/GROUNDING CONDUCTOR IN ALL RACEWAYS USED FOR POWER DISTRIBUTION.

CONDUIT RACEWAYS

- PROVIDE METAL CONDUIT, TUBING, AND FITTINGS OF TYPES, GRADES, SIZES, AND WEIGHTS (WALL THICKNESS) AS REQUIRED; WITH MINIMUM TRADE SIZE OF 3/4". INSTALL ELECTRICAL RACEWAY SYSTEMS IN ACCORDANCE WITH MANUFACTURER'S WRITTEN INSTRUCTIONS AND APPLICABLE REQUIREMENTS OF NEC AND NECA "STANDARD OF INSTALLATION" IN ACCORDANCE WITH THE FOLLOWING:
  - FEEDERS: INSTALL FEEDERS RATED 100 AMPS AND GREATER, IN ELECTRICAL METALIC CONDUIT (EMT).
  - BRANCH CIRCUITS, AND INDIVIDUAL EQUIPMENT CIRCUITS RATED LESS THAN 100 AMPS: INSTALL IN ELECTRICAL METALLIC TUBING (EMT).
  - PROVIDE RIGID METAL CONDUIT (RMC) FOR ALL BENDS IN BURIED CONDUIT GREATER THAN 30 DEGREES. PROVIDE PROTECTIVE COATING FOR RIGID METAL CONDUIT BENDS. INSTALL FLEXIBLE CONDUIT FOR CONNECTIONS OF MOTORS, TRANSFORMERS, AND OTHER ELECTRICAL EQUIPMENT WHERE SUBJECT TO MOVEMENT AND VIBRATIONS. PROVIDE OZ, EXPANSION FITTINGS ON ALL CONDUITS CROSSING BUILDING EXPANSION JOINTS, BOTH IN SLAB AND SUSPENDED.
  - PROVIDE SURFACE RACEWAYS OF SIZES AND CHANNELS INDICATED. PROVIDE FITTINGS THAT MATCH AND MATE WITH RACEWAY.

CONDUCTORS AND CABLES

- PROVIDE FACTORY-FABRICATED CONDUCTORS FOR SIZED, RATINGS, MATERIAL, AND TYPES INDICATED FOR EACH SERVICE. PROVIDE COPPER CONDUCTORS, WITH THHN/THWN INSULATION. SIZE ALL CONDUCTORS IN ACCORDANCE WITH NEC; MINIMUM SIZE TO BE #12 AWG. PROVIDE STRANDED CONDUCTORS FOR #8 AWG AND LARGER.

ELECTRICAL BOXES AND FITTINGS

- PROVIDE ONE PIECE GALVANIZED FLAT ROLLED SHEET STEEL INTERIOR OUTLET WIRING BOXES, CORROSION-RESISTANT CAST-METAL WEATHERPROOF OUTLET WIRING BOXES, CODE-GAGE SHEET STEEL JUNCTIONS AND PULL BOXES, CAST-IRON WATERPROOF ADJUSTABLE FLOOR BOXES, GALVANIZED CAST-METAL CONDUIT BODIES, CORROSION-RESISTANT PUNCHED-STEEL BOX KNOCKOUT CLOSURES, CONDUIT LOCKOUTS AND MALLEABLE STEEL CONDUIT BUSHINGS AND OFFSET CONNECTORS, AND ALL ACCESSORIES AS REQUIRED TO SUIT EACH RESPECTIVE LOCATION AND INSTALLATION. FASTEN BOXES RIGIDLY TO SUBSTRATES OR STRUCTURAL SURFACES TO WHICH ATTACHED, OR SOLIDLY EMBED ELECTRICAL BOXES IN CONCRETE OR MASONRY. USE BAR HANGERS FOR STUD CONSTRUCTION.

SUPPORTING DEVICES

- PROVIDE SUPPORTS, ANCHORS, SLEEVES AND SEALS AS REQUIRED FOR A COMPLETE RACEWAY SUPPORT SYSTEM, INCLUDING BUT NOT LIMITED TO: CLEVIS HANGERS, RISER CLAMPS, C-CLAMPS, BEAM CLAMPS, ONE AND TWO HOLE CONDUIT STRAPS, OFFSET CONDUIT CLAMPS, EXPANSION ANCHORS, TOGGLE BOLTS, THREADED RODS, U-CHANNEL STRUT SYSTEM, AND ALL ASSOCIATED ACCESSORIES. INSTALL IN ACCORDANCE WITH MANUFACTURER'S WRITTEN INSTRUCTIONS AND WITH RECOGNIZED INDUSTRY PRACTICES TO INSURE SUPPORTING DEVICES COMPLY WITH REQUIREMENTS. PROVIDE RIGID ATTACHMENT OF ALL FLOOR MOUNTED EQUIPMENT TO THE FLOOR SLAB OR STRUCTURAL SYSTEM.

ELECTRICAL SEISMIC CONTROL

- PROVIDE SEISMIC CONTROL EQUIPMENT INCLUDING BUT NOT LIMITED TO: VIBRATION ISOLATORS, FLEXIBLE CONNECTIONS, RIGID STEEL FRAMES, ANCHORS, INSERTS AND ATTACHMENTS, SEISMIC SNUBBER AND BRACING TO MEET THE SEISMIC REQUIREMENTS FOR THE PROJECT SITE.

WIRING DEVICES

- PROVIDE GRADE FACTORY-FABRICATED WIRING DEVICES, IN TYPES, AND ELECTRICAL RATINGS FOR APPLICATIONS INDICATED AND COMPLYING WITH NEMA STDS PUB NO. WD-1. PROVIDE HEAVY DUTY SPECIFICATION GRADE, 20- AMPERES RATED, GROUNDING TYPE CONVENIENCE OUTLETS,. PROVIDE 20-AMPERES RATED TOGGLE SWITCHES. CONSTRUCT WIRING DEVICE OF HEAVY DUTY HIGH IMPACT NYLON AND PROVIDE COVER PLATES TO MATCH. PROVIDE DEVICES IN COLORS SELECTED BY ARCHITECT.

FLOOR BOXES

- PROVIDE LEVELING AND FULLY ADJUSTABLE FLOOR SERVICE RECEPTACLE OUTLETS AND FITTINGS OF TIME AND RATINGS AS INDICATED ON THE DRAWINGS. ALL BOXES SHALL COMPLY WITH UL STANDARD UL514A.

PANELBOARD AND SWITCHBOARDS

- PROVIDE GALVANIZED SHEET STEEL CABINET TYPE ENCLOSURES, IN SIZES AND NEMA TYPES AS INDICATED, CODE-GAGE MINIMUM 16-GAUGE THICKNESS. PROVIDE DEAD FRONT SAFETY TYPE PANELBOARDS WITH DOOR-IN-DOOR HINGED FRONTS. EQUIP WITH ALUMINUM BUS BARS, FULL-SIZED NEUTRAL AND GROUND BUS. PROVIDE ENCLOSURES FABRICATED BY SAME MANUFACTURER AS OVERCURRENT DEVICES. BOLT ENGRAVED PLASTIC LAMINATE LABELS INDICATING PANEL NAME AND VOLTAGE ON THE INTERIOR AND EXTERIOR OF PANELBOARD OR SWITCHBOARD.

OVERCURRENT PROTECTIVE DEVICES

- PROVIDE OVERCURRENT PROTECTIVE DEVICES OF THE SAME MANUFACTURER AS THE SWITCHBOARD AND/OR PANELBOARD MANUFACTURER. PROVIDE FACTORY-ASSEMBLED DEVICES OF AMPERAGE, VOLTAGE, AND RMS INTERRUPTING RATING SHOWN. PROVIDE DEVICES AS FOLLOWS:
  - MOLDED CASE THERMAL TRIP CIRCUIT BREAKERS:
    - PROVIDE FACTORY-ASSEMBLED BOLT-ON MOLDED CASE CIRCUIT BREAKERS WITH PERMANENT THERMAL TRIP AND ADJUSTABLE INSTANTANEOUS MAGNETIC TRIP IN EACH POLE. SERIES RATING IS NOT ACCEPTABLE. CONSTRUCT BREAKERS FOR MOUNTING AND OPERATING IN ANY PHYSICAL POSITION AND IN AN AMBIENT TEMPERATURE OF 40 DEGREES C.
    - CIRCUIT BREAKERS 15 AMPS THROUGH 599 AMPS SHALL BE MOLDED CASE SOLID-STATE CIRCUIT BREAKERS.

MOTOR AND CIRCUIT DISCONNECTS

- PROVIDE HEAVY-DUTY TYPE SAFETY SWITCHES; FUSIBLE OR NON-FUSIBLE AS INDICATED. PROVIDE SWITCHES RATED AT 600 VOLTS, 60 HZ; INCORPORATING QUICK-MAKE, QUICK-BREAK TYPE MECHANISMS. EQUIP WITH OPERATING HANDLE THAT IS CAPABLE OF BEING PADLOCKED IN THE OFF POSITION. PROVIDE NEMA ENCLOSURE RATINGS BASED ON LOCATION OF INSTALLATION.

LIGHTING FIXTURES

- PROVIDE LIGHTING FIXTURES COMPLETE WITH ALL COMPONENTS FOR EACH SIZE, TYPE, AND RATING INDICATED. THIS INCLUDES, BUT NOT LIMITED TO HOUSING, DRIVER, REFLECTORS, AND WIRING. SIZE FUSES PER BALLAST MANUFACTURER'S RECOMMENDATION. PROVIDE ALL NECESSARY SUPPORTS, BRACKETS, AND MISCELLANEOUS EQUIPMENT FOR MOUNTING OF FIXTURES. SUPPORT ALL GRID MOUNTED FIXTURES FROM THE BUILDING STRUCTURE WITH #12 GA. STEEL WIRE ATTACHED TO EACH CORNER; INDEPENDENT OF THE CEILING SYSTEM. PROVIDE BACKING SUPPORTS. PROVIDE GYPSUM BOARD PROTECTION AS REQUIRED TO MAINTAIN FIRE RATING OF EACH CEILING IN WHICH FIXTURES ARE INSTALLED. PROVIDE ALL EXTERIOR FIXTURES WITH DAMP OR WET LOCATION LABEL AS REQUIRED BY APPLICATION. PROVIDE CLASS 2 WIRING FOR ALL FIXTURES INDICATED TO HAVE 0-10V DIMMING.

ELECTRICAL IDENTIFICATION

- PROVIDE ELECTRICAL IDENTIFICATION PRODUCTS FOR BURIED ELECTRICAL LINES, ARC-FLASH HAZARD LABELS (ANSI Z535.4), SOURCE OF SUPPLY LABELS, AVAILABLE FAULT CURRENT LABELS AND EMERGENCY OPERATING SIGNS TO EQUIPMENT INSTALLED AS PART OF THIS PROJECT.
- PROVIDE NYLON TYPE COVERPLATES THAT MATCH DEVICES. PROVIDE METAL COVERS FOR ALL DEVICES IN UNFINISHED SPACES
- PROVIDE LABELS ON COVERPLATES INDICATING SOURCE OF POWER (I.E. PANEL - CIRCUIT #).

FIRE ALARM AND DETECTIONS SYSTEMS

- PROVIDE AN EXTENSION TO THE EXISTING FIRE ALARM SYSTEM WITH ALL APPLICABLE PROVISIONS OF THE CURRENT NFPA 72, NATIONAL FIRE ALARM CODE, IFC INTERNATIONAL FIRE CODE AND SHALL MEET ALL REQUIREMENTS OF THE LOCAL AUTHORITY HAVING JURISDICTION. PROVIDE A MINIMUM OF #14 AWG COPPER WIRING IN 3/4" CONDUIT. FIRE ALARM MC IS NOT ALLOWED. PROVIDE DEDICATED LOOPS FOR TENANT SPACE.

TELECOMMUNICATIONS (RACEWAY ONLY)

- PROVIDE A COMPLETE RACEWAY SYSTEM INCLUDING BUT NOT LIMITED TO: RACEWAY, OUTLETS, COVER PLATES, BACKBOARDS, GROUNDING, AND MISCELLANEOUS ITEMS AS REQUIRED.
- PROVIDE (1) 3/4" EMT CONDUIT FROM EACH TELEPHONE AND DATA DEVICE TO CABLE TRAY OR TELECOM RACK (WHICHEVER IS CLOSER). COMPLY WITH NEC, BICSI AND RECOGNIZED INDUSTRY PRACTICES. PROVIDE NYLON PULL CORD IN ALL INSTALLED RACEWAY.
- PROVIDE (1) #6 BARE COPPER GROUND FROM EACH TELEPHONE/DATA SYSTEM TERMINAL BOARD TO THE SERVICE ENTRANCE GROUND. COIL SIX FEET OF CONDUCTOR AT EACH TERMINAL BOARD.

BNA CONSULTING
4225 Lake Park Blvd, Suite 275
West Valley City, UT 84120
P: 801.532.2196
F: 801.532.2305
www.bnaconsulting.com
SALT LAKE ST. GEORGE

Velicrax TI
S & K INDUSTRIAL
850 WEST MILL POND DRIVE, LEHI, UTAH

REVISIONS		
MARK	DATE	DESCRIPTION

DATE:	Issue Date
PROJECT NO:	22419
DRAWN BY:	BNA
CHK'D BY:	BNA

ELECTRICAL
ONE-LINE &
SPECIFICATIONS

E004

11/23/2022 1:57:48 PM

PANELBOARD SCHEDULE

PANEL: L1 **TYPE:** Type 1 **VOLTS:** 120/208 Y **PHASE:** 3 **WIRES:** 4

LOCATION:
FED FROM: MB
MOUNTING: SURFACE
BUSSING: ALUMINUM

MAINS/BUS AMPS: 200
MAIN DISC. TYPE: MCB
MAIN DISC. TRIP: 200

LUGS: Standard
X DOOR-IN-DOOR
___ 200% NEUTRAL
___ ISO GROUND
___ SPD

BRANCH BREAKERS

ITEM	AMPS	POLE	WIRE SIZE	CIR. NO.	A	B	C	A	B	C	CIR. NO.	WIRE SIZE	POLE	AMPS	ITEM
LIGHTING 1ST FLOOR	20 A	1	#12	1	666 VA			640 VA			2	#12	1	20 A	LIGHTING 2ND FLOOR
RECEPT	20 A	1	#12	3		180 VA			1559 VA		4	#12	1	20 A	LIGHTING WAREHOUSE
RECEPT	20 A	1	#12	5			360 VA			500 VA	6	#12	1	20 A	EXHAUST FAN
RECEPT	20 A	1	#12	7	720 VA			540 VA			8	#12	1	20 A	RECEPT
RECEPT	20 A	1	#12	9		720 VA			720 VA		10	#10	1	20 A	RECEPT
RECEPT	20 A	1	#10	11			900 VA			900 VA	12	#10	1	20 A	RECEPT
RECEPT	20 A	1	#10	13	720 VA			720 VA			14	#10	1	20 A	RECEPT
*DISPOSAL	20 A	1	#8	15		1200 VA			360 VA		16	#12	1	20 A	RECEPT
*REFRIGERATOR	20 A	1	#8	17			1500 VA			540 VA	18	#12	1	20 A	RECEPT
RECEPT	20 A	1	#10	19	720 VA			360 VA			20	#12	1	20 A	RECEPT
RECEPT	20 A	1	#8	21		1500 VA			540 VA		22	#12	1	20 A	RECEPT
ROOF TOP UNIT	50 A	3	#6	23			4467 VA			3000 VA	24	#8	2	40 A	WATER HEATER
--	--	--	--	25	4467 VA			3000 VA			26	--	--	--	--
--	--	--	--	27		4467 VA			0 VA		28	--	1	20 A	SPARE
SPARE	20 A	1	--	29			0 VA			0 VA	30	--	1	20 A	SPARE
SPARE	20 A	1	--	31	0 VA			0 VA			32	--	1	20 A	SPARE
SPARE	20 A	1	--	33		0 VA			0 VA		34	--	1	20 A	SPARE
SPARE	20 A	1	--	35			0 VA			0 VA	36	--	1	20 A	SPARE
SPARE	20 A	1	--	37	0 VA			0 VA			38	--	1	20 A	SPARE
SPARE	20 A	1	--	39		0 VA			0 VA		40	--	1	20 A	SPARE
SPARE	20 A	1	--	41			0 VA			0 VA	42	--	1	20 A	SPARE

12553	11246	12167	**TOTAL (VA)**
106 A	94 A	103 A	**AMPS/PHASE**

CONNECTED LOAD TOTAL
35967 VA

AIC RATING: 5,674 **AMPS RMS SYSM.**

NOTES:
* PROVIDE 5mA GFCI CIRCUIT BREAKER

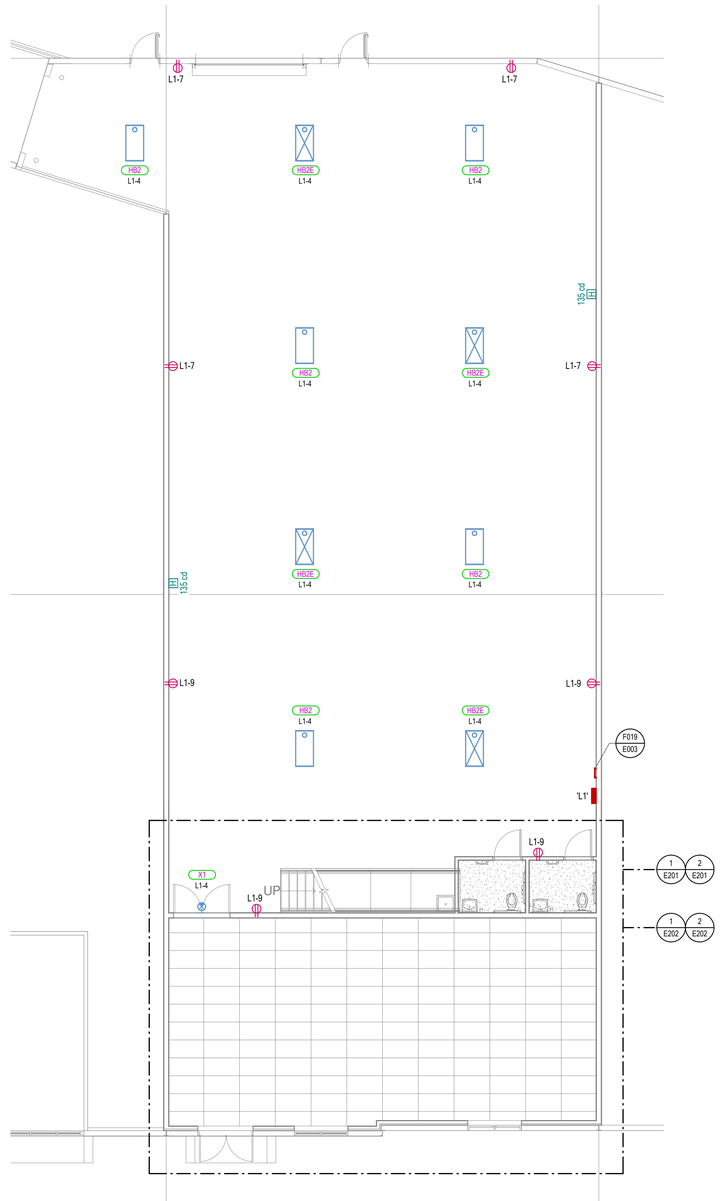

WAREHOUSE ELECTRICAL PLAN
SCALE = 1/8" = 1'-0"

LIGHTING GENERAL SHEET NOTES

1. REFER TO ARCHITECTURAL REFLECTED CEILING PLANS FOR ALL FIXTURE LOCATIONS WITHIN A CEILING OR CEILING GRID. FOR AREAS WITHOUT CEILINGS, FIXTURE LOCATIONS ARE DIAGRAMMATIC. THE INTENT IS TO ALIGN, CENTER, OR SPACE FIXTURES BETWEEN ARCHITECTURAL AND STRUCTURAL ELEMENTS. COORDINATE WITPAINTINGCONTRACTOR FOR PAINTING OF EXPOSED RACEWAY.
2. ALL ROOM CONTROLLERS AND/OR POWER PACKS SHALL BE INSTALLED IN THE CEILING SPACE DIRECTLY ABOVE THE ENTRY DOOR TO THE SPACE IT IS CONTROLLING.
3. PROVIDE 0-10V DIMMING CONDUCTORS FOR ALL AREAS AND/OR ROOMS WHERE 0-10V DIMMING IS INDICATED BY THE RELAY PANEL SCHEDULE AND/OR WALL STATION CONTROL SEQUENCE.
4. SUBSCRIPT ADJACENT TO LIGHT FIXTURE INDICATES CONTROLS, PROVIDE LIGHTING CONTROLS WITH THE REQUIRED NUMBER OF RELAY/DIMMIERS. PROVIDE ADDITIONAL RELAY/DIMMERS FOR DAYLIGHT ZONES AS REQUIRED.
5. ALL EXPOSED CONDUIT SHALL BE ROUTED PERPENDICULAR AND PARALLEL TO BUILING LINES. ALL EXPOSED CONDUIT POUTING SHALL BE COORDINATED WITH OWNER'S REP PRIOR TO INSTALLATION. NO ADDITIONAL COST TO THE OWNER WILL BE ALLOWED FOR RELOCATING CONDUIT DUE TO LACK OF COORDINATION WITH THE OWNER'S REP

POWER GENERAL SHEET NOTES

1. ELECTRICAL CONTRACTOR SHALL COORDINATE EXACT LOCATION OF ALL MECHANICAL UNITS WITH MECHANICAL CONTRACTOR.
2. CIRCUITS TO ALL MECHANICAL EQUIPMENT SHALL BE DEDICATED UNLESS NOTED OTHERWISE.
3. ALL EXPOSED CONDUIT SHALL BE ROUTED PERPENDICULAR AND PARALLEL TO BUILING LINES. ALL EXPOSED CONDUIT POUTING SHALL BE COORDINATED WITH OWNER'S REP PRIOR TO INSTALLATION. NO ADDITIONAL COST TO THE OWNER WILL BE ALLOWED FOR RELOCATING CONDUIT DUE TO LACK OF COORDINATION WITH THE OWNER'S REP

FIRE ALARM GENERAL SHEET NOTES

1. PROVIDE #14 AWG MINIMUM WIRING FOR ALL SIGNAL AND INITIATION DEVICES.
2. ALL EXPOSED CONDUIT SHALL BE ROUTED PERPENDICULAR AND PARALLEL TO BUILING LINES. ALL EXPOSED CONDUIT POUTING SHALL BE COORDINATED WITH OWNER'S REP PRIOR TO INSTALLATION. NO ADDITIONAL COST TO THE OWNER WILL BE ALLOWED FOR RELOCATING CONDUIT DUE TO LACK OF COORDINATION WITH THE OWNER'S REP
3. ALL BACK BOXES SHALL BE FLUSH MOUNTED UNLESS OTHERWISE NOTED. CONTRACTOR SHALL COORDINATE INSTALLATION OF CONDUIT AND BACK BOXES IN POURED CONCRETE, PRE- CAST CONCRETE, MASONERY AND GYP WALLS.
4. ALL VISUAL DEVICES SHALL BE SYNCHRONISED WITHIN THE BUILDING REGARDLESS OF PROJECT SCOPE BOUNDARIES.
5. PROVIDE (2) DUCT TYPE SMOKE DETECTOR FOR EACH FAN COIL UNIT , AHU , SUPPLY FAN ND HEAT PUMP OF 2000 CFM OR GREATER

SHEET KEYNOTES

BNA CONSULTING
4225 Lake Park Blvd, Suite 275
West Valley City, UT 84120
P: 801.532.2196
F: 801.532.2305
www.bnaconsulting.com
SALT LAKE ST. GEORGE

Velicrax TI
S & K INDUSTRIAL
850 WEST MILL POND DRIVE, LEHI, UTAH

REVISIONS

MARK	DATE	DESCRIPTION

DATE:	Issue Date
PROJECT NO:	22419
DRAWN BY:	Author
CHK'D BY:	Checker

WAREHOUSE ELECTRICAL PLAN

E101

11/23/2022 1:57:49 PM

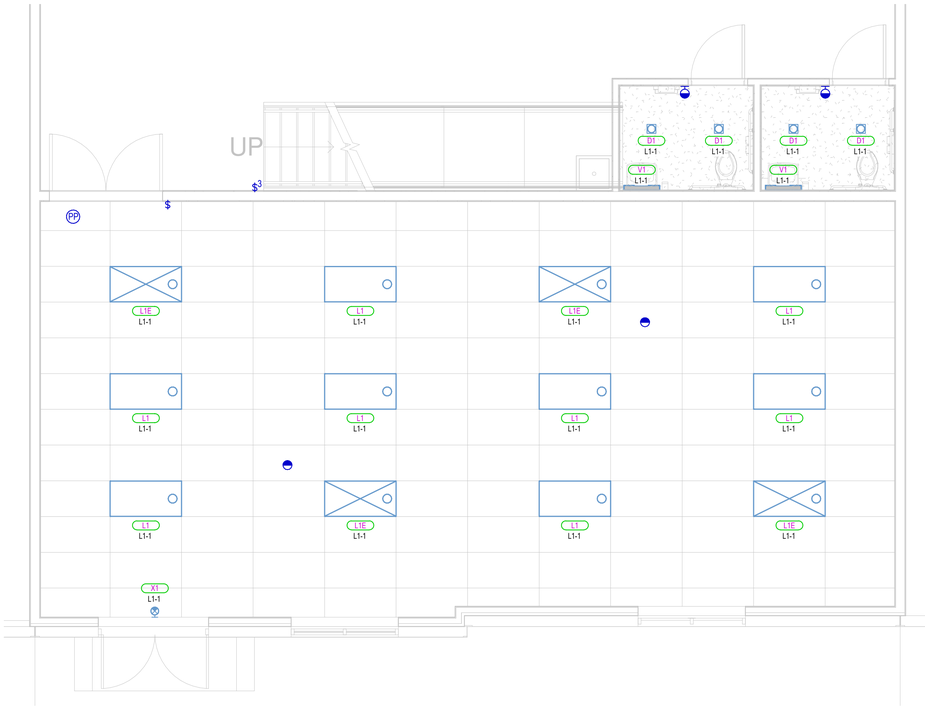

1 LEVEL 1 - LIGHTING PLAN
SCALE = 1/4" = 1'-0"

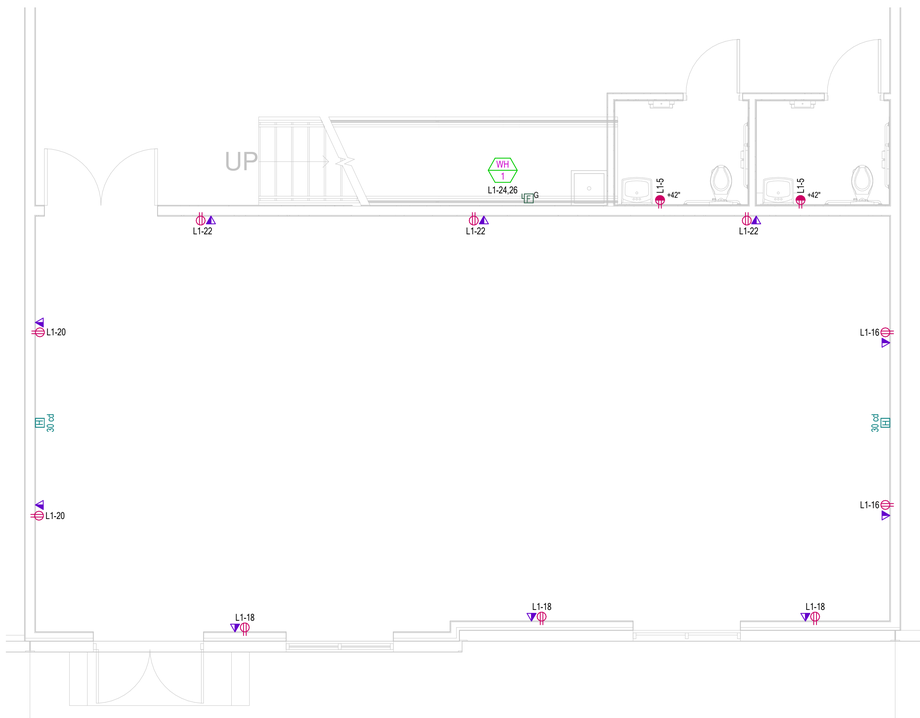

2 LEVEL 1 - POWER PLAN
SCALE = 1/4" = 1'-0"

LIGHTING GENERAL SHEET NOTES

1. REFER TO ARCHITECTURAL REFLECTED CEILING PLANS FOR ALL FIXTURE LOCATIONS WITHIN A CEILING OR CEILING GRID. FOR AREAS WITHOUT CEILINGS, FIXTURE LOCATIONS ARE DIAGRAMMATIC. THE INTENT IS TO ALIGN, CENTER, OR SPACE FIXTURES BETWEEN ARCHITECTURAL AND STRUCTURAL ELEMENTS. COORDINATE WITPAINTINGCONTRACTOR FOR PAINTING OF EXPOSED RACEWAY.
2. ALL ROOM CONTROLLERS AND/OR POWER PACKS SHALL BE INSTALLED IN THE CEILING SPACE DIRECTLY ABOVE THE ENTRY DOOR TO THE SPACE IT IS CONTROLLING.
3. PROVIDE 0-10V DIMMING CONDUCTORS FOR ALL AREAS AND/OR ROOMS WHERE 0-10V DIMMING IS INDICATED BY THE RELAY PANEL SCHEDULE AND/OR WALL STATION CONTROL SEQUENCE.
4. SUBSCRIPT ADJACENT TO LIGHT FIXTURE INDICATES CONTROLS, PROVIDE LIGHTING CONTROLS WITH THE REQUIRED NUMBER OF RELAY/DIMMIERS. PROVIDE ADDITIONAL RELAY/DIMMERS FOR DAYLIGHT ZONES AS REQUIRED.
5. ALL EXPOSED CONDUIT SHALL BE ROUTED PERPENDICULAR AND PARALLEL TO BUILING LINES. ALL EXPOSED CONDUIT POUTING SHALL BE COORDINATED WITH OWNER'S REP PRIOR TO INSTALLATION. NO ADDITIONAL COST TO THE OWNER WILL BE ALLOWED FOR RELOCATING CONDUIT DUE TO LACK OF COORDINATION WITH THE OWNER'S REP

POWER GENERAL SHEET NOTES

1. ELECTRICAL CONTRACTOR SHALL COORDINATE EXACT LOCATION OF ALL MECHANICAL UNITS WITH MECHANICAL CONTRACTOR.
2. CIRCUITS TO ALL MECHANICAL EQUIPMENT SHALL BE DEDICATED UNLESS NOTED OTHERWISE.
3. ALL EXPOSED CONDUIT SHALL BE ROUTED PERPENDICULAR AND PARALLEL TO BUILING LINES. ALL EXPOSED CONDUIT POUTING SHALL BE COORDINATED WITH OWNER'S REP PRIOR TO INSTALLATION. NO ADDITIONAL COST TO THE OWNER WILL BE ALLOWED FOR RELOCATING CONDUIT DUE TO LACK OF COORDINATION WITH THE OWNER'S REP

FIRE ALARM GENERAL NOTES

1. PROVIDE #14 AWG MINIMUM WIRING FOR ALL SIGNAL AND INITIATION DEVICES.
2. ALL EXPOSED CONDUIT SHALL BE ROUTED PERPENDICULAR AND PARALLEL TO BUILING LINES. ALL EXPOSED CONDUIT POUTING SHALL BE COORDINATED WITH OWNER'S REP PRIOR TO INSTALLATION. NO ADDITIONAL COST TO THE OWNER WILL BE ALLOWED FOR RELOCATING CONDUIT DUE TO LACK OF COORDINATION WITH THE OWNER'S REP
3. ALL BACK BOXES SHALL BE FLUSH MOUNTED UNLESS OTHERWISE NOTED. CONTRACTOR SHALL COORDINATE INSTALLATION OF CONDUIT AND BACK BOXES IN POURED CONCRETE, PRE- CAST CONCRETE, MASONERY AND GYP WALLS.
4. ALL VISUAL DEVICES SHALL BE SYNCHRONISED WITHIN THE BUILDING REGARDLESS OF PROJECT SCOPE BOUNDARIES.
5. PROVIDE (2) DUCT TYPE SMOKE DETECTOR FOR EACH FAN COIL UNIT , AHU , SUPPLY FAN ND HEAT PUMP OF 2000 CFM OR GREATER

SHEET KEYNOTES

BNA CONSULTING
4225 Lake Park Blvd, Suite 275
West Valley City, UT 84120
P: 801.532.2196
F: 801.532.2305
www.bnaconsulting.com
SALT LAKE ST. GEORGE

Velicrax TI
S & K INDUSTRIAL
850 WEST MILL POND DRIVE, LEHI, UTAH

REVISIONS

MARK	DATE	DESCRIPTION

DATE:	Issue Date
PROJECT NO:	22419
DRAWN BY:	Author
CHK'D BY:	Checker

LEVEL 1 - ELECTRICAL PLANS

E201

11/23/2022 1:57:50 PM

1 LEVEL 2 - LIGHTING PLAN

SCALE = 1/4" = 1'-0"

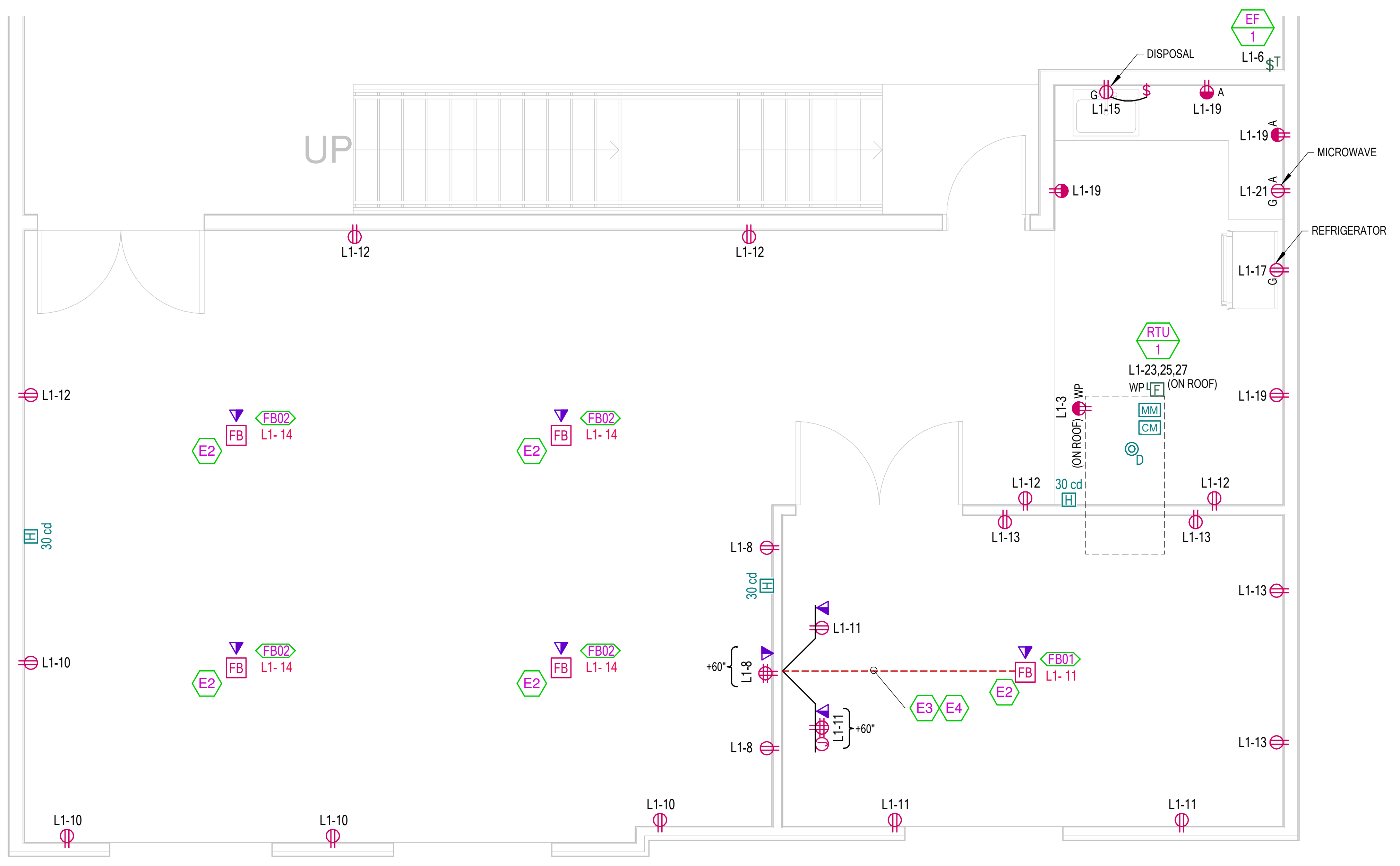

2 LEVEL 2 - POWER PLAN

SCALE = 1/4" = 1'-0"

11/23/2022 1:57:50 PM

LIGHTING GENERAL SHEET NOTES

1. REFER TO ARCHITECTURAL REFLECTED CEILING PLANS FOR ALL FIXTURE LOCATIONS WITHIN A CEILING OR CEILING GRID. FOR AREAS WITHOUT CEILINGS, FIXTURE LOCATIONS ARE DIAGRAMMATIC. THE INTENT IS TO ALIGN, CENTER, OR SPACE FIXTURES BETWEEN ARCHITECTURAL AND STRUCTURAL ELEMENTS. COORDINATE WITPAINTINGCONTRACTOR FOR PAINTING OF EXPOSED RACEWAY.
2. ALL ROOM CONTROLLERS AND/OR POWER PACKS SHALL BE INSTALLED IN THE CEILING SPACE DIRECTLY ABOVE THE ENTRY DOOR TO THE SPACE IT IS CONTROLLING.
3. PROVIDE 0-10V DIMMING CONDUCTORS FOR ALL AREAS AND/OR ROOMS WHERE 0-10V DIMMING IS INDICATED BY THE RELAY PANEL SCHEDULE AND/OR WALL STATION CONTROL SEQUENCE.
4. SUBSCRIPT ADJACENT TO LIGHT FIXTURE INDICATES CONTROLS, PROVIDE LIGHTING CONTROLS WITH THE REQUIRED NUMBER OF RELAY/DIMMIERS. PROVIDE ADDITIONAL RELAY/DIMMERS FOR DAYLIGHT ZONES AS REQUIRED.
5. ALL EXPOSED CONDUIT SHALL BE ROUTED PERPENDICULAR AND PARALLEL TO BUILING LINES. ALL EXPOSED CONDUIT POUTING SHALL BE COORDINATED WITH OWNER'S REP PRIOR TO INSTALLATION. NO ADDITIONAL COST TO THE OWNER WILL BE ALLOWED FOR RELOCATING CONDUIT DUE TO LACK OF COORDINATION WITH THE OWNER'S REP

POWER GENERAL SHEET NOTES

1. ELECTRICAL CONTRACTOR SHALL COORDINATE EXACT LOCATION OF ALL MECHANICAL UNITS WITH MECHANICAL CONTRACTOR.
2. CIRCUITS TO ALL MECHANICAL EQUIPMENT SHALL BE DEDICATED UNLESS NOTED OTHERWISE.
3. ALL EXPOSED CONDUIT SHALL BE ROUTED PERPENDICULAR AND PARALLEL TO BUILING LINES. ALL EXPOSED CONDUIT POUTING SHALL BE COORDINATED WITH OWNER'S REP PRIOR TO INSTALLATION. NO ADDITIONAL COST TO THE OWNER WILL BE ALLOWED FOR RELOCATING CONDUIT DUE TO LACK OF COORDINATION WITH THE OWNER'S REP

FIRE ALARM GENERAL NOTES

1. PROVIDE #14 AWG MINIMUM WIRING FOR ALL SIGNAL AND INITIATION DEVICES.
2. ALL EXPOSED CONDUIT SHALL BE ROUTED PERPENDICULAR AND PARALLEL TO BUILING LINES. ALL EXPOSED CONDUIT POUTING SHALL BE COORDINATED WITH OWNER'S REP PRIOR TO INSTALLATION. NO ADDITIONAL COST TO THE OWNER WILL BE ALLOWED FOR RELOCATING CONDUIT DUE TO LACK OF COORDINATION WITH THE OWNER'S REP
3. ALL BACK BOXES SHALL BE FLUSH MOUNTED UNLESS OTHERWISE NOTED. CONTRACTOR SHALL COORDINATE INSTALLATION OF CONDUIT AND BACK BOXES IN POURED CONCRETE, PRE- CAST CONCRETE, MASONERY AND GYP WALLS.
4. ALL VISUAL DEVICES SHALL BE SYNCHRONISED WITHIN THE BUILDING REGARDLESS OF PROJECT SCOPE BOUNDARIES.
5. PROVIDE (2) DUCT TYPE SMOKE DETECTOR FOR EACH FAN COIL UNIT , AHU , SUPPLY FAN ND HEAT PUMP OF 2000 CFM OR GREATER

SHEET KEYNOTES

E2	COORDINATE FLOORBOX LOCATIONS AND CONNECTION TYPES PRIOR TO ROUGH-IN. CONTRACTOR TO ENSURE PROPER INSTALLATION.
E3	PROVIDE (1) 1.5" CONDUIT FROM FLOORBOX TO ADJACENT WALL AND RUN VERTICALLY TO WALL MOUNTED TV FOR HDMI CABLE.
E4	PROVIDE (1) 1" CONDUIT FROM FLOORBOX TO ADJACENT WALL AND RUN VERTICALLY TO ACCESSIBLE CEILING SPACE FOR DATA CABLING.

BNA
CONSULTING
4225 Lake Park Blvd, Suite 275
West Valley City, UT 84120
P: 801.532.2196
F: 801.532.2305
www.bnaconsulting.com
SALT LAKE ST. GEORGE

Velicrax TI
S & K INDUSTRIAL
850 WEST MILL POND DRIVE, LEHI, UTAH

STATE OF UTAH

REVISIONS

MARK	DATE	DESCRIPTION

DATE: Issue Date
PROJECT NO: 22419
DRAWN BY: Author
CHK'D BY: Checker

LEVEL 2 -
ELECTRICAL
PLANS

E202